I-B.Tech (Sem- I/II)

STUDENT HANDBOOK

A.Y.2018-19

Department of S&H

HOLY MARY INSTITUTE OF TECHNOLOGY & SCIENCE

Bogaram (V), Keesara (M), Medchal (Dist)

Hyderabad – 501301, Telangana State

Website: www.hits.ac.in Email: principalhitscoe@gmail.com

VISION STATEMENT

VISION STATEMENT OF HITS

To be a premier institute for the study of engineering, technology and management by maintaining high academic standards which promote the analytical thinking and independent judgment among the prime stakeholders enabling them to function responsibly in the globalized society.

MISSION STATEMENT

MISSION STATEMENT OF HITS

- To impart quality professional education that meets the needs of present and emerging technological world.
- To strive for student achievement and success, preparing them for life and leadership with ethics.
- To provide a scholarly and vibrant learning environment that enables faculty, staff and students achieve personal and professional growth.
- To contribute to advancement of knowledge, in both fundamental and applied areas of engineering, technology & management.
- To undertake research and development works by forging alliances with research institutes, government organizations, industries and alumni and become a center of excellence for quality professional educations and research.

GOALS OF HITS

GOALS OF HITS

Goals of engineering education at undergraduate / graduate level:

- Equip students with industry – accepted career and life skills
- To create a knowledge warehouse for students
- To disseminate information on skills and competencies that are in use and in demand by the industry
- To create learning environment where the campus culture acts as a catalyst to student fraternity to understand their core competencies, enhance their competencies and improve their career prospects.
- To provide base for lifelong learning and professional development in support of evolving career objectives, which include being informed, effective, and responsible participants within the engineering profession and in society.
- To prepare students for graduate study in Engineering and Technology.
- To prepare graduates to engineering practice by learning from professional engineering assignments.

VISION STATEMENT OF DEPARTMENT

- To promote quality education, accessible to the different branches of Engineering course without any discrimination of caste, creed, colour, sex and religion and help students discover their true potential through the Humanities and Sciences Department.

MISSION STATEMENT OF DEPARTMENT

•To provide integrated, continuous and wholesome development of students by equipping them with knowledge and skills, social values and ethics, scientific attitude and orientations for lifelong education to mould them into useful citizens of the society.

•To create an environment conducive to expanding the total participation of the students, faculty, staff and management.

•In making the institution a centre of excellence imparting quality technical education and also to arm the students with the competence to be at the forefront of cutting edge technology and entrepreneurship in highly competitive global market.

PROGRAM EDUCATIONAL OBJECTIVES

PEOI	Be successfully employed as a Software Engineer in the field of Information Technology
PEOII	Be a successful entrepreneur and assume leadership position, responsibility within an organization
PEOIII	Progress through advanced degree or certificate programs in engineering, business, and other professionally related fields

PROGRAMME OUTCOMES

PO1	An ability to apply knowledge of computing, mathematics, science, and engineering fundamentals appropriate to the discipline
PO2	Identify, formulate and analyze complex engineering problems reaching substantiated conclusions using principles of mathematics and engineering sciences
PO3	An ability to design and develop solutions for IT Problems to meet desired needs within pragmatic constraints such as economic, environmental, political, manufacturability, and sustainability
PO4	Conduct investigations of complex problems using research-based knowledge and research methods including design of experiments, analysis and interpretation of data, and synthesis of the information to provide valid conclusions
PO5	An ability to use and apply modern technical concepts, tools and practices in the core Information Technologies
PO6	An ability to analyze the local and global impact of computing on individuals, organizations, and society
PO7	An ability to effectively integrate IT-based solutions into the user environment constantly
PO8	An understanding of professional, ethical, legal, security and social issues and responsibilities
PO9	Function effectively as an individual, and as a member or leader in diverse teams, and in multidisciplinary settings
PO10	Ability to communicate effectively with all stake holders
PO11	Apply Project Management skills and knowledge in Practice as a team member/ leader to manage projects
PO12	Recognition of the need for and the ability to engage in Life Long Learning

Our Pioneers...

Dr. A.VARA PRASAD REDDY – CHAIRMAN

To strive and ensure 100% employability to the student community by filling the gap between the students and the requirements of the industry through quality education".

- Graduate in Mechanical Engineering.

- Has been in the field of education from the past 25 years.
- Aim of spreading quality education among children at the school & college level.
- Committed personality with an acute interest in Spreading Technical Education.
- Also the founder chairman of Nalanda Group of Institutions, Guntur, A.P.

Dr. A.VIJAYA SARADA REDDY – SECRETARY

"Nothing is permanent in this world except change. We should change ourselves according to the industry. We mould the students as per the need of the hour. Continuous training & learning will make us always ahead from others".

- Doctorate in Management Studies
- Outstanding personality with a vision of building up the standard and quality Educational Institutions.

I sincerely hope that our students will use the facilities provided to them in our campus and find their profession and justify the trust placed in them by their family, Society and Nation in helping the Country in its march towards becoming a developed Country. Let me take this opportunity to congratulate all departments of our Holy Mary and Nalanda Group of Institutions for their untiring efforts and wish all the students the very best in their attempts to build up purposeful careers for them

Dr. P. BHASKARA REDDY – DIRECTOR

Dr.P.Bhaskara Reddy, the Director HITS is a and dynamic Professor of ECE, has 30 years of Industry, Teaching, Research and Administrative experience in Reputed Engineering Colleges & Industry. In 28 years of experience served various positions from Asst. Professor to Principal/Director.

Research & Guidance: Published 2 Books 1. "Information Technology in Technical Education – Economic Development by "LAMBERT Academic Publishing" 2. Innovative Methods of Teaching Electronic Devices and Circuits by "Hi Tech Publisher" Published 9 Laboratory Manuals, 126 Research papers at National and International Level journals / Conferences on Education, Electronics Communication, I.T, Computer Networks, E-Commerce etc. Guided 5 Research Scholars for their Doctorates, about 50 M.Tech., M.C.A. and B.Tech projects and completed 2 DST Projects an amount of Rs.72.83 Lakhs.

Symposiums Conducted: 12 National Level Technical Symposiums on various topics in Electronics & Communications, Computers etc.

Awards Received: 1). Bharath Jyothi Award in 2003 from IIFS, New Delhi, 2). Rastraprathiba Award in 2004 from ICSEP, New Delhi, 3). vledge Award from Alumni of SVHCE for the year 2001

1. GENERAL INFORMATION

ABOUT THE COLLEGE

1.0 BEAUTIFUL CAMPUS

Set in Sylvan surroundings away from the hustle & bustle of city life yet only 4 kms away from Hyderabad – Warangal National Highway (near Ghatkesar), the Institute is extremely conducive to academic, co-curricular and extra-curricular activities. It has large and well ventilated buildings with modern equipment in place and "State of the art", sports facilities.

HIGHLIGHTS:

1.1 PERFORMANCE

- Top 13th Rank in Telangana and Top 19th Rank in AP & Telangana and Top 107th Rank in Overall India by The Week Magazine Top 150 Engineering Colleges Ranking 2018 for the A.Y.2018-19.
- Top 04th Rank in Telangana and Top 05th Rank in AP & Telangana and Top 57th Rank in Overall India by Outlook Magazine Top 100 Engineering Colleges Ranking 2018 for the A.Y.2018-19.
- Top 17th Rank in Telangana and Top 27th Rank in AP & Telangana and Top 148th Rank in Overall India by i3RC Times of India Top 150 Engineering Institute Rankings 2018 for the A.Y.2018-19.
- Top 17th Rank in Telangana and Top 33rd Rank in AP & Telangana and Top 153rd Rank in Overall India by India Today Best 165 Engineering Colleges in India Rank 2018 for the A.Y.2018-19.
- Holy Mary Institute of Technology & Science, recognized as Business Incubator (BI) / Host Institute (HI) for implementation of the scheme "Support for Entrepreneurial and Managerial development of SMEs through Incubator" by Ministry of Micro, Small & Medium Enterprises, Govt. of India, New Delhi on 14-03-2018

1.2 FACULTY

The College is proud to have the best faculty, a blend of experienced and academics with eminent academicians team IIT's, NIT's and other reputed organizations teaching at the Institute that makes HITS as one of the best Institute pursue B.Tech, M.Tech and MBA as one of the under JNTU Hyderabad. The faculty is constantly encouraged to upgrade their qualifications and a number of them have enrolled for Ph.D.

1.3 INFRASTRUCTURES

- Spacious campus and natural surroundings with plenty of greenery
- College Transport facilities from twin cities for students and staff from all corners of the city

- Air Conditioned auditorium for organizing events, workshops and seminars
- Good Canteen facility
- Bank ATM in the campus
- Fully equipped Laboratories with the state-of-art equipment's

1.4 LABORATORIES

The Institute has State of the art laboratories with 1000 plus Branded Systems equipped with latest hardware and software with online testing facility catering to the needs of CSE. The Institute also has well equipped ECE, EEE, Civil, Mechanical Engineering Labs and Workshops for Engineering Students.

1.5 ENGLISH LANGUAGE LABORATORY

The Institute has established Ultramodern Computerized English language Laboratory with 60 plus Computer Systems loaded with latest Software to enhance the Soft skills of Students to make the Students Industry ready.

The Library also have the previous University Exam Question papers and previous project reports from all the departments. The library contains recorded lectures of all IIT professors from NPTEL.

1.6 R&D CELL

The Institute has an R&D Cell under the Chairmanship of Dr.P.Bhaskara Reddy. The R&D cell undertakes externally funded R&D projects from agencies like AICTE, DST, UGC and other similar state, private and society / trust bodies. It also undertakes research publications and interactions of faculty members with outside world.

1.7 LIBRARY

The Institute Library has over 49500 books and 150 National and International journals and 15 Magazines that are required to all branches of Engineering. The Institute has the unique distinction of becoming Member of DELNET, Infotrac engineering online journals that connects more than 700 libraries in Asia Pacific Region. The Library has 30 Computers with 10 Mbps, Internet Facility that makes our knowledge Savvy Students to be technically competent on par with Industry professionals. NPTEL Videos and e-books, MIT courses also available.

1.8 NATIONAL PROGRAMME ON TECHNOLOGY ENHANCED LEARNING (NPTEL)

The main objective of NPTEL program is to enhance the quality of engineering education in the country by developing curriculum based video and web courses. This is being carried out by seven IITs and IISc Bangalore as a collaborative project. In the first phase of the project, supplementary content for 129 web courses in engineering / science and humanities have been developed. Each course contains materials that can be covered in depth in 60 or more lecture hours. In addition, 110 courses have been developed in video format, with each course comprising of approximately 60 or more one-hour lectures. In the next phase other premier institutions are also likely to participate in content creation.

1.9 CO-CURRICULAR ACTIVITIES

The Institution organizes Local Industrial Visits to Organizations like Infosys, CPRI, TSRTC, and to Student Conferences. The Institute focuses on Techno Management Events like Elysium to enhance the Technical Skills and Soft Skills to make them Employable.

1.10 PROFESSIONAL BODIES

Holy Mary Institute of Technology & Science has the unique distinction of becoming Institutional Member in Professional bodies such as Confederation of Indian Industry (CII), The Associated Chambers of Commerce of India (ASOCHAM)), Confederation Of Women Entrepreneurs (COWE), Computer Society of India (CSI), Institute of Electronics and Telecommunication Engineering (IETE), Indian Society of Technical Education (ISTE) and Indian Institutions of Production (IIP)

1.11 EXTRA-CURRICULAR ACTIVITIES

HITS has State of the art facilities like Olympic Style Basketball Court, Volleyball Court, Gymnasium, Indoor Stadium, Cricket Stadium. HITS has been regularly conducting JNTU Zonal Games and Annual Open Invitational Volleyball, Football, Cricket Tournaments.

The Institute also organizes various Cultural Events like Traditional Day for freshers, "ELYSIUM" A National Level Technical Fest, The Annual Day Celebrations, Farewell Party for final year students, Alumni Meet for Ex. Students and Graduation Day for graduated students every year to imbibe a spirit of Oneness.

NSS Activities:

A Sense of social responsibility is inculcated in Young Minds by organizing Plantation Programmes, Health Awareness Camps, Blood Donation Camps, Flood Relief Camps and Distribution of Books to School Childrens by HITS NSS Volunteers.

1.12 IN HOUSE PROJECTS

The students are taking part in International Project competitions hosted by major MNCs, like IBM, Microsoft and Infosys. The Great Mind Challenge hosted by IBM, Microsoft Imagine Cup and project work as part of foundation programme

conducted under the aegis of Infosys are some of the important projects presently being undertaken by the students of HITS. Further, the students are encouraged to do In House Projects under the supervision of expect faculty members. In addition, students are encouraged to give innovative ideas and do projects under the aegis of Microsoft academic innovative alliance.

1.13 MOUs

- Ramtech Industries
- Tata Strive
- Bhartiya Skill Development University
- Arrow Constructions
- Techona Enterprises
- Surya Tech Solutions
- EDS Technologies Pvt Ltd
- Seoul National University (Korea)
- Ark Infosolutions Pvt Ltd
- Steinmetz Integrated Learning Solutions Pvt Ltd
- IBM
- Oracle
- Microsoft
- Abigya Training & Consultant
- Ramsys Infocad

For giving special training programmes to engineering students and Faculty members of the institute

1.14 STUDENT ACHIEVEMENTS

- Mr. D Bala Koti student of 3rd year Mechanical has got Rs. 7.00 Lakhs project fund from AICTE-New Delhi and project entitle SAE Baha.
- Mr. D Bala Koti student of 3rd year Mechanical has participated in the workshop on Automobile Engine Mechanics and won Campus Ambassador Award organized by IIT, Hyderabad held on 06th & 07th January 2018.
- Ms. V Veda & Mr. K Vishal students of 3rd year Civil have participated in the event of poster presentation and won 1st prize at Advitiya-2K18 organized by TKR College Engineering & Technology, Hyderabad held on March 2018.
- Mr. V Srikanth Raju, Mr.K Saicharan Reddy, Mr. P Saikiran Reddy, Mr. J Rajashekar Reddy & Mr. D Hari Prasad students of 3rd year ECE have participated and won 1st prize in Utkraanti, A National Level Championship on IOT workshop organized by HITS, Hyderabad held on 27th & 28th February 2018.
- Mr. D Bala Koti student of 3rd year Mechanical has participated and won 3rd prize in Utkraanti, A National Level Championship on IOT workshop organized by HITS, Hyderabad held on 27th & 28th February 2018.
- Ms. A K Keerthi Supraja & Ms.Ayushee students of 2nd year Civil have participated in the event of paper presentation and won 1st prize at National level students Technical Symposium (Tech Samprathi 2018) organized by NREC, Hyderabad held on 05th & 06th January 2018.

- Mr. J Anoop Sai & Mr.K Bharat Kumar students of 2nd year ECE have participated in the event of poster presentation and won 2nd prize at National level Inter College Technical Championship (HAVANA-Trigger Your Skills) organized by GITAM University, Hyderabad held on 19th & 20th December 2017.
- Mr. K Satish, Mr. B Ajay & Mr. M.Vijay students of 4th year EEE have participated in the event of project Expo Competition and won 2nd prize at Prajwalan-2K18 organized by Vignan's Institute of Management & Technology for Women, Hyderabad held on 03rd February 2018.
- Ms. P Chaitanya & Mr. P Mahesh Kumar students of 3rd year EEE have participated in the event of paper presentation and won 1st prize at TechVeda-18 organized by Tirumala Engineering College, Hyderabad held on 19th - 23rd February 2018.
- Mr. M Vijay & Mr. K Satish students of 4th year EEE have participated in the event of Tech Expo and won 1st prize at Reva-2K18 organized by Tirumala Engineering College, Hyderabad held on 19th - 23rd February 2018.
- Mr. B Ajay & Mr. K Satish students of 4th year EEE have participated in the event of paper presentation and won 1st prize at Texzellenz-18 organized by Anurag College of Engineering, Hyderabad held on 16th & 17th February 2018.
- Mr. A Dhanunjay & Mr. P Sandesh students of 2nd year Mechanical have participated in the event of paper presentation and won 1st prize at Texzellenz-18 organized by Anurag College of Engineering, Hyderabad held on 16th & 17th February 2018.
- Mr. Y S J Srivathsa & Mr.M.Sai Nikhil students of 2nd year Mechanical have participated in the event of Assembly & Dissembly and won 1st prize at Texzellenz-18 organized by Anurag College of Engineering, Hyderabad held on 16th & 17th February 2018.
- Mr. P Yashwanth & Mr.K Sridhar Goud students of 2nd year Mechanical have participated in the event of Assembly & Dissembly and won 2nd prize at Texzellenz-18 organized by Anurag College of Engineering, Hyderabad held on 16th & 17th February 2018.
- Mr. M Nuthan Kumar, Mr. A Vikesh & Mr.G Mahesh students of 2nd year Mechanical have participated in the event of Assembly & Dissembly and won 3rd prize at Texzellenz-18 organized by Anurag College of Engineering, Hyderabad held on 16th & 17th February 2018.
- Mr. M Aravind student of 2nd year Mechanical has participated in the event of Tools & Part Identification and won 2nd prize at Texzellenz-18 organized by Anurag College of Engineering, Hyderabad held on 16th & 17th February 2018.
- Mr. K Ashish Patel & Mr. V Naveen Reddy students of 2nd year Mechanical have participated in the event of paper presentation and won 2nd prize at Texzellenz-18 organized by Anurag College of Engineering, Hyderabad held on 16th & 17th February 2018.
- Mr. K Tilak, Mr. Ahmed Humzah & Mr. Rajneesh Kumar Singh students of 2nd year Mechanical have participated in the event of paper presentation and won 3rd prize at Texzellenz-18 organized by Anurag College of Engineering, Hyderabad held on 16th & 17th February 2018.

- Mr. K Satish & Mr. B Ajay students of 4th year EEE have participated in the event of paper presentation and won 1st prize at Prajwalan-2K18 organized by at Vignan's Institute of Management & Technology for Women, Hyderabad held on 03rd February 2018.
- Ms. K Lavanya & Mr. B Prakash students of 4th year ECE have participated in the event of Mehandi Competition and won 2nd prize at Prajwalan-2K18 organized by at Vignan's Institute of Management & Technology for Women, Hyderabad held on 03rd February 2018.
- Ms. U Ashmita student of 3rd year ECE has participated in the event of paper presentation and won 1st prize at Prajwalan-2K18 organized by at Vignan's Institute of Management & Technology for Women, Hyderabad held on 02nd February 2018.
- Mr. D Bala Koti student of 3rd year Mechanical has participated in the workshop organized by IIT, Hyderabad and awaded with appreciation certificate held on 26th & 27th January 2018.
- Mr. P Chaitanya student of 3rd year EEE has participated in the event of paper presentation and won 2nd prize in CSI Brainwaves-2K18 organized by MREC, Hyderabad held on 25th January 2018.
- Our Voleyball team participated and bagged Runners in the sports fest held at Samskruthi Engineering College, Hyderabad.
- Our Voleyball team participated and bagged Runners in the sports fest held at MRCET, Hyderabad on 02nd & 03rd February 2018.
- Our Football team participated and bagged Runners in the sports fest held at MRCET, Hyderabad on 02nd & 03rd February 2018.
- Ms.P.Sandhya student of ECE has participated in the Carrom and bagged 2nd Place in the sports fest held at Vignan's Institute of Management & Technology for Women, Hyderabad.
- Ms.K Anushkala Sinha student of ECE has participated in the Chess and bagged 2nd Place in the sports fest held at Vignan's Institute of Management & Technology for Women, Hyderabad.
- Mr. D Shashank student of 1st year CSE has participated in the event of Telangana 4th senior inter district Sepaktakraw Championship 2017 and won 3rd place organized by Adilabad District Sepaktakraw Association held on 06th & 07th January 2018.

1.15 ALUMNI OUTREACH

- The Institute has Alumni Association under the name and Style of HITS Alumni Association and conducted the First Alumni Meet on Feb 2010 at Ramada Manohar Hotel Hyderabad with the batches 0f 2005, 2006, 2007 & 2008 passed out B.Tech & MBA students attending the meet.

- The Association conducted 2nd Alumni meet for B.Tech & MBA students on February 2011 at our college Auditorium.
- The Association conducted 3rd Alumni meet for B.Tech & MBA students on February 2012 at our college Auditorium.

- The Association conducted 4th Alumni meet for B.Tech & MBA students on February 2013 at our college Auditorium.
- The Association conducted 5th Alumni meet for B.Tech, M.Tech & MBA students on February 2014 at our college Auditorium.
- The Association conducted 6th Alumni meet for B.Tech, M.Tech & MBA students on February 2015 at our college Auditorium.
- The Association conducted 7th Alumni meet for B.Tech, M.Tech & MBA students on February 2016 at our college Auditorium.
- The Association conducted 8th Alumni meet for B.Tech, M.Tech & MBA students on February 2017 at our college Auditorium.

1.16 CONTACT INFORMATION

Principal	- Dr.P.Bhaskara Reddy	- 9848511063
Dept. Head Civil	- Dr.M.S.Chauhan	- 7331139087
Dept. Head CSE	- Dr.Ch.V.Raghavendran	- 9848261114
Dept. Head ECE	- Mr.Y.D.Solomon Raju	- 9618111744
Dept. Head EEE	- Mr.S.Radha Krishna Reddy	- 9618111799
Dept. Head Mech	- Dr.B.S.Reddappa	- 9618111877
Dept. Head MBA	- Dr.K.Madhava Rao	- 9963343546
Dept. Head S&H	- Mr. Pratyush Kumar Patnayak	- 9948437913

2. PLACEMENT & HIGHER STUDIES

A separate T & P cell is constituted for career guidance, training & placements. Training programmes in technical, aptitude and soft skills. Several training programmes were

conducted for personality development and life skills to make the students industry ready. Holy Mary Institute of Technology & Science is the only institute in Telangana to conduct online & written examination for campus recruitments where more than 35000 students from all over Telangana have taken the recruitment test conducted by MNCs like., Tata Consultancy Services, Infosys, HCL Technologies Ltd, Cognizant Technology Solutions, Mahindra Satyam, iGATE Global Solutions, Mphasis, IBM, Dell and Infotech Enterprises Ltd. The Placement Cell interacted with 156 Companies and placed more than 1000 students for Internships & Placements.

2.1 INDUSTRY GRADE SKILLS REQUIRED FOR EMPLOYMENT

Behavioral and Communication Skills are recognized as important elements in professional development of an Engineer including English for specific purposes. Employers give considerable value to these diverse set of skills at the time of interviews.

In addition to course curriculum, every student will gain the following skills during the study period:

- Analytical and Problem solving skills
- Subject – specific knowledge
- Research and improved decision making abilities
- Oral communication skills
- Managerial skills
- Understanding of other cultures
- Confidence and competence to work in International environment

As students are the future leaders, the Responsibility, Accountability and exhibiting the leadership skills should start from the first year of engineering. Every student is advised to read/practice from the following books;

- Verbal and Nonverbal by R S Agarwal
- Baron GRE
- Wren and Martin English Grammar Book

2.2 IMPORTANT CRITERIA OF EMPLOYMENT

In addition to the industry grade skills required for employment, the most important criteria for employment is that the student should get a minimum of 60% in academics with no backlogs to make them eligible for campus recruitments. In the recent past, many companies stipulated a cut of 68% for attending the interview / writing the test. Every student should Endeavour to achieve a minimum of 68% with no backlogs to make them suitable for picking up by good companies.

Job Portals:

1. www.freshersworld.com
2. www.monster.com
3. www.naukri.com

2.3 HIGHER STUDIES M.TECH

The Graduate Aptitude Test in Engineering (GATE) is an all-India examination administered and conducted in eight zones across the country by the GATE Committee comprising faculty from Indian Institute of Science, Bangalore and seven Indian Institutes of Technology on behalf of the National Coordinating Board - GATE, Department of Education, Ministry of Human Resources Development (MHRD), and Government of India.

Objective

To identify meritorious and motivated candidates for admission to Post Graduate Programmes in Engineering, Technology, Architecture and Pharmacy at the National level. To serve as benchmark for normalization of the Undergraduate Engineering Education in the country.

This provides an opportunity for advanced engineering education in India. An M.E or M.Tech degree is a desirable qualification for our young engineers seeking a rewarding professional career. Engineering students, while in the final year of their degree course, spend considerable time in seeking an opening for studies in foreign universities. The students are advised to pursue M.Tech in IIT's/NIT's/University Colleges.

MBA

Earning a Master's of Business Administration (MBA) degree can provide you with management skills and business expertise that open new career opportunities to you. An MBA program will also launch you into the much higher pay range that upper level managers and executives enjoy. Furthermore, in the high-level positions, an MBA degree will allow you to hold and your work will often be more interesting and rewarding. The students are advised to pursue M.BA in IIM's/XLRI/Reputed Business Schools.

Higher Studies Abroad

TOEFL is mandatory for seeking admission in any academic course at any level- undergraduate, graduate or post graduate, in USA and Canada. Similarly UK Universities ask for IELTS for seeking admission to graduate and past graduate courses.

GRE the Graduate Record Examination (GRE) is administered by the Educational Testing Services (ETS) for admission into all graduate academic programs (except management) in universities across USA and Canada and some selected universities across the world including India. The exam is a Computer Adaptive Test and is administered at any of the Sylvan testing centers in the country after prior registration.

The GMAT is a Computer Adaptive Test administered online by Educational Testing Services (ETS) through Sylvan testing centers located in all the major cities in India.

Those who wish to enroll for courses in Business Management in American universities have to take the GMAT test and submit their scores to the department.

2.4 VARIOUS SCHOLARSHIPS AVAILABLE IN INDIA

Bharat Petroleum Scholarship For Higher Studies | Balarama Digest Scholarship | Central Institute of Indian Languages | Fair & Lovely Foundation - Project Saraswati Scholarships | Government Of India Office of the Director General of Civil Aviation Scholarship | Homi Bhabha Centre For Science Education Tata Institute of Fundamental Research Research Scholarships | HSBC Scholarships | Indian Council Of Agricultural Research Award Of National Talent Scholarship In Agriculture | Indian Institute Of Geomagnetism Research Scholars | Invention Awards For School Children | Indian Oil Corporation Ltd (IOCL) - Scholarships | Jawaharlal Nehru Memorial Fund Jawaharlal Nehru Scholarships For Doctoral Studies | Junior Research Scholarships For Cancer Biology Tata Memorial Centre & Tata Memorial Hospital | Jaigopal Garodia Vivekananda Trust Scholarships | Lalit Kala Akademi - Scholarship | Mahindra All India Talent Scholarships For Diploma courses In Polytechnics | National Brain Research Centre Scholarships | NTPC Scholarships | National Institute Of Science Communication And Information Resources(NISCAIR) | National Board For Higher Mathematics(NBHM) | National Thermal Power Corporation Ltd.Scholarships | National Olympiad Programme | National Level Science Talent Search Examination - 2005 | Narotam Sekhsaria Scholarship Programme | National Brain Research Centre Scholarships, Post-Doctoral Fellowships | National Aptitude Test | NIIT National IT Aptitude Test | Oil And Natural Gas Corporation Ltd (ONGC) Scholarships To SC/ST Students | Office Of The Director General of Civil Aviation Scholarships Stipend to the SC/ST Candidates | Rashtriya Sanskrit Sansthan - Scholarships | Scholarships To Young Artistes | Saf-Madanjeet Singh Scholarship | Sports Authority Of India - Sports Scholarships | SAF-Madanjeet Singh Scholarship | Spic Macay Scholarships | The Childrens Foundation - Scholarships | The L&T Build-India Scholarship | The Hindu-Hitachi Scholarships | The Paul Foundation Scholarships | Technology Information Forecsting and Assessment Council(TIFAC) Women Scientist Scholarship Scheme | The Young Talent IT Scholarship The Dr.GB Scholarships Foundation |

2.5 VARIOUS INTERNATIONAL SCHOLARSHIPS AVAILABLE IN INDIA

A * STAR India Youth Scholarship | A.M.M. Arunachalam-Lakshmi Achi Scholarship For Overseas Study | British Chevening Scholarships | Bharat Petroleum - Scholarships for Higher Studies | Cambridge Nehru Scholarships | Commonwealth Scholarship and Fellowship | Czech Government Scholarship | Chevening Technology Enterprise Scholarship Programme | Chinese Government Scholarship | Greek Government Scholarships | Israel Government Scholarship | Iranian Government Scholarship | Offer of Italian Government Scholarship | Japanese Government Scholarships | K.C.Mahindra Scholarships For Post-Graduate Studies Abroad | Lady Meherbai D.Tata Scholarships | Mexican Government Scholarship | Norwegian Government Scholarships | National Overseas Scholarships/Passage Grant for ST Candidates | Portuguese Government Scholarships | Sophia Merit Scholarships Inc | Slovak Government Scholarship | SIA Youth Scholarships | The Rhodes Scholarships

India | The Ramakrishna Mission Institute Of Culture Award of Debesh-Kamal Scholarships For Studies Abroad | The Inlaks Foundation - Scholarships |

Website for Higher Studies:

1. www.higherstudyabroad.org
2. www.highereducationinindia.com

3. STUDENT CAREER ORIENTED PROFESSIONAL CERTIFICATION COURSES

As per the career plan for students of Holy Mary Institute of Technology & Science with a view to bridge the gap between Industry and Academia, it has been planned to equip every student with at

least three International / National certification by the time he / she completes the course of study. The details of the certification courses are given below:

Branch	Year	Name of the Certification Course
Computer Science and Engineering	2nd Year	Certificate Information Technology
	3rd Year	IBM Certified DB2 Database Associate, Infosys Campus Connect
	4th Year	IBM Certified Rational Application Developer
	4th Year	SUN Certified Java Programmer
Electrical and Electronics Engineering	2nd Year	Institute of Electronics and Telecommunication Engineering
	3rd Year	Motorola @ CAMPUS
	4th Year	IBM Certified DB2 Database Associate
Mechanical and Civil Engineering	2nd Year	Certificate in AutoCAD
	3rd Year	Certificate in HighPerMesh
	4th Year	Certificate in CATIA

4. PERFORMANCE MONITORING AND GUIDANCE

4.1 STUDENT FEEDBACK

In case the students find it difficult to cope up / understand a particular subject, they

are advised to discuss it with

a. The Concerned Teacher
b. The Class Teacher
c. The Department Head
d. The Principal

Students can use the suggestion boxes for communicating feedback. Students should mention their names so that they can be informed of the progress / more details / clarifications can be obtained.

4.2 CLASS TEACHER

Every class is assigned a Class Teacher (a faculty member). Students can directly discuss their college related or personal problems related to studies with them. The Class Teachers are accessible to the students and they can talk to the Class Teacher or whenever they are free from class / lab work. Class Teacher will meet with the class representative on daily basis to discuss their day-to-day difficulties if any.

4.3 CLASS REPRESENTATIVES AND THEIR ROLES

Two students from each class are selected as the Class Representatives from the department basing on their academic performance and discipline. Department Head makes the selections.

Responsibilities of the Class Representatives:

- Communicating the departmental / college directives & information to the students.
- Collecting the feedback of difficulties faced by the students and communicating Suggestions for improvements.
- Coordinating academic events and co-curricular activities.
- Encourage students to interact for better studies, sharing books and notes.
- Compilation and submission of MIS form to class teacher at the end of the period.

4.4 PERFORMANCE COUNSELLING

Mentors will evaluate the student individually for the following:

a. Less marks in internal exams
b. Continuous absence (3 days) and shortage of attendance
c. Not understanding the subject
d. Students from Telugu medium
e. Assistance for back log subjects etc.
f. Communication with parents
g. Provide help to back log students

4.5 REMEDIAL CLASSES / TUTORIAL / REVISIONS

Remedial Classes are conducted for students who are weak and who do not perform well in their internal examinations / class tests or for the students who want extra help. Slots in the time table have been reserved for Tutorial where in the students are helped to solve the question in the class itself.

4.6 BACKLOG MANAGEMENT

The Mentors maintain a complete record of Examination results of each student and they counsel and guide them in preparing for backlogs. Students are provided with material and important questions are discussed.

4.7 CORRESPONDENCE WITH PARENTS

Parents will be informed about the performance of their ward from time to time in the semester. However, parents are requested to be in touch with the Student mentor / Department Head on a regular basis. Further, parents are sent sms on daily bases if their wards do not attend the college.

5. RULES AND REGULATIONS FOR STUDENTS

5.1 ADMINISTRATIVE

1. Students, admitted into this College, are deemed to have agreed to the rules and regulations of the college, as laid down by the College Authorities from time to time, and the rules lay down in this leaflet, issued at the time of admission.
2. Students should inform **any changes in the addresses/Phone No.** of their parents /

guardians to the college office.

3. The college shall communicate to the parents \ guardians of the students from time to time regarding the regularity and performance in the examinations of their wards. The case of serious indiscipline on the part of the students (s) may also be communicated to parent (s) \ guardian (s).

5.2. ACADEMIC

1. Students should **attend the classes in - time**. Late- comers shall not be permitted to enter the class room and they are likely to **lose the attendance**.
2. Students are expected to be regular to the classes. The students shall not absent themselves for classes without prior approval. **Prior permission** shall be taken from concerned **counselor** and submitted to the **Head of the Department**.
3. In case of **ill-health**, the student should submit the **medical certificate** along with prescription, etc., from a **registered medical doctor**. The student should get the medical certificate within **two days** from the date of reporting to the college after iII health and also produce a **letter from Father/ Mother** regarding ill-health. Permission on medical grounds shall not be granted for one or two days.
4. The students should come to the laboratories with the **prescribed uniform**.
5. If a student **disturbs the class** or makes mischief, he / she will be marked absent and may be **expelled from the class**.
6. Students shall spend their **leisure time** in the library/computer center.
7. Students are expected to put up the **minimum aggregate percentage of attendance (75%)** as laid down by the JNT University. Students, falling short of 75% of attendance shall not be promoted to the next Semester \ Class.
8. Parents \ guardians of the students can contact the college authorities either in person or by post regarding discipline, regularity in attending classes, performance in the examinations, etc., of their wards.

5.3 DRESS CODE

1. Students are expected to attend the college **properly dressed**. They should wear the prescribed uniform while attending laboratory classes.
2. Students are expected to **carry the identity cards**, issued by the college, in the campus. They are required to show the identity cards at the library, computer center, office, etc. Students without Identity Cards are not allowed in to the laboratory classes.

5.4 DISCIPLINE & PUNCTUALITY

1. No student shall **enter or leave** the class room **without the permission** of the teacher.
2. **Calling students** out of their class rooms while the lecture is in progress is prohibited.
3. Students are required to help in keeping the rooms, buildings, and premises **clean and tidy**. Writing or sticking up of posters and notices on the walls is strictly prohibited.
4. Smoking, Consumption of alcohol, intoxicating drinks or drugs is **strictly prohibited** in and around the college premises. Those indulging in such activities will be put severely or expelled.
5. Students are expected to behave well with the staff, other students and the general public. Any **misbehavior**, coming to the notice of the college authorities, will be severely dealt with.
6. The conduct of the students should be exemplary not only within the premises of the

college but also outside. This will help in maintaining the **image and status** of the college.

7. Students are required to **observe silence** at all times in the college campus. They shall not talk in loud tone or call each other by shouting.
8. Students are **prohibited** from loitering in the verandahs / campus during class hours, and sitting on the steps, stair-cases or parapet walls.
9. Students are **not permitted** to resort to strikes and demonstrations within the campus. Participation in such activity entails their dismissal from the college. Any problem they face may be represented to the Counselor / Head of the Department / Principal.
10. Students are **prohibited carrying Cell Phones** and organizing any meeting or entertainment in the college campus without the permission of the college authorities.
11. The entry of **outsiders without permission** is prohibited. Any student found responsible for bringing outsiders into the campus for settling personal disputes with other students, shall be **expelled** from the college.
12. The college is entitled to take any **disciplinary action**, which is deemed necessary in the case of any indiscipline on the part of the students. The same will be reflected on the **Conduct Certificate** issued at the time of leaving the college.
13. No Student Unions, except **Professional Associations**, are **permitted** in the college.
14. If the students cause any **damage to the college property** knowingly or unknowingly individually or in a group they have to pay **5 times to cost of property** damaged them. All the students are collectively responsible for the proper maintenance college property i.e. building, furniture, lab equipment, garden, playgrounds, etc., recovery, calculated on semester to semester basis, will be collected along with examination fee for the semester.

15. Students should keep their **vehicles** only at the **parking place allotted** for the purpose. Vehicle riding in the campus is strictly prohibited.
16. Sitting on the parapet wall and Riding beyond the **parking limits**, the fine will be imposed to Rs.100.00
17. Breakage or loss of equipment /property as decided by the appropriate authority
18. The Principal/Director may, on the recommendation of the Head of the Department, or otherwise, inflict the **following punishments** in the interests of the student discipline and the Institution: fined, curtailment attendance, denial of promotion to next semester, suspension, expulsion or such other action as deemed necessary for the maintenance of discipline in the campus

5.5 LAB CLASSES

All students must attend lab classes without fail. Those absent shall follow this procedure laid down in the prescribed format explaining valid reasons and obtain permission to attend the future classes.

5.6 FEE

1. All students admitted into this college, will be required to pay the prescribed tuition fee and other specified fees. Failure of the same will result in the cancellation of admission. No portion of fees will be refunded under any circumstances. If any student wishes to change the college or discontinue the course at any point for any reason, he \ she shall not be permitted to do so unless he \ she pays balance amount of four years fees which

he \ she would have to pay, if he \she continued till the completion of the course. His \ Her original certificates including I.e., etc., will be issued only after all the dues as stated above, are cleared by the students. All senior students must pay the college fee every year on or before the 15th of July irrespective of the reopening of the college. If they fail the fine will be imposed as per norms of the management.

2. Miscellaneous fee paid for expenditure related to training programs i.e., technical or soft skills etc., is not refundable.
3. Other than the above, if any fees are levied by the University the student has to be pay the same.

5.7. TRANSPORT

All students who are availing the college bus facility must carry the bus-pass and must produce when demanded, failing which they will not allowed traveling in the bus. All students must travel in the allotted bus and routes. They should not change but occupy only their allotted seats throughout. Unauthorized students caught in the bus for not having the bus pass, should pay even if they traveled for one day also. First and second year are not allowed to bring two-wheelers.

5.8. LIBRARY RULES

1. Library Books will be issued for 15 days' time and renewal depends upon the demand of the book.
2. Silence should be strictly maintained in the library.
3. Students are responsible for the library borrower card issued to them. Loss of the library card should be reported in writing to the circulation section immediately. Duplicate library borrower card will be issued on payment of Rs.150/- after a week time from the date of application for duplicate cards.
4. The Library borrower card is not transferable.
5. Students shall not make any sort of conversation in any part of the library, causing inconvenience to others.
6. Students shall not bring their belongings inside the library and should keep them outside the library.
7. Students leaving from the library should be checked at the exit.
8. Tearing of pages/stealing of books will invite suspension from using of the library facilities and further disciplinary action will be taken against such students, as per college norms.
9. The borrower shall replace the **new book within 7 days; otherwise, he/she has to pay 3 times of the book cost, along with fine**. In case of loss of book.

5.9. GENERAL

1. All the students admitted in this college have to give an **undertaking** to abide by the **rules and regulations** of this college in prescribed format given by the college.
2. All the students **should attend** the college after vacations (Dasara / Sankranthi / Christmas / Semester term / summer) on the **re-opening day** without fail.
3. Students must **deposit all the relevant original certificates and documents** at the time of the admission Office and they will not be returned until completion of the course.
4. Admission of any student can be cancelled by the Management at any point during the

course for reasons which are not in consonance with the rules and regulations and which are detrin the reputation of the college.

5. All the Students are here by informed that **college authorities will not take any responsibility** for **loss or theft of your valuable items and money** kept in your bags or somewhere else. Hence we request all the students are not to keep your valuables in class room or anywhere without your presence.
6. ***Fee for Issue of Duplicates***

a)	Duplicate Hall ticket	Rs. 100.00
b)	Duplicate Identity Card	Rs. 100.00
c)	Duplicate College Bus Pass	Rs. 50.00
d)	Duplicate Study Certificate for same purpose	Rs. 50.00
e)	Xerox copies of OD's	Rs. 50.00

All Breakage etc., penalties will be displayed on the Notice Board, and must be paid by the student and no student will be allowed to write examination or internal test or laboratory test, if penalties are not paid by the due date specified in the notice or circular.

5.10. RAGGING

Ragging in any form inside or outside the college campus is banned/Prohibited vide Ragging Act 26 of AP. legislative Assembly 1997. Those who indulge in this uncivilized activity are liable for severe disciplinary actions besides being liable for prosecution.

SALIENT FEATURES

Ragging means doing an act which causes or is likely to cause insult 'or annoyance or fear or apprehension or threat or intimidation or outrage of modesty or injury to a student.

S. No.	Nature of Ragging	Punishment
1	Teasing, Embarrassing and Humiliating	Imprisonment Upto 6 Month or Fine Upto Rs 1000/- or Both.
2	Assaulting or using criminal Force or criminal intimidation	Imprisonment Upto 1 Year or Fine Upto Rs 2000/- or Both.
3	Wrongfully restraining or Confining or causing hurt	Imprisonment Upto 2 Years or Fine Upto Rs 5000/- or Both.
4	Causing grievous hurt kidnapping or raping or committing unnatural offence	Imprisonment Upto 5 Years or Fine Upto Rs 10000/- or Both
5	Causing death or abating Suicide	Imprisonment Upto 10 Years or fine Upto Rs. 50000/- or Both

Note:

1. A student convicted of any of the above offences, will be, dismissed from the college
2. A student imprisoned for more than six months for any of the above offences 'will not be admitted in any other College.
3. A student against whom there is prima facie evidence of ragging in any form will be suspended from the college immediately.

Prohibition of Ragging

1. Ragging is prohibited as per act 26 of AP. Legislative assembly, 1997.

2. Ragging entails heavy fines and/or imprisonment.
3. Ragging invokes suspension and dismissal from the college.
4. Outsiders are prohibited from entering the college premises without permission.
5. All students must carry their identity cards and show them when demanded.
6. The principal and staff will visit and inspect the rooms at any time.
7. Suspended students are debarred from entering the campus except when required to attend enquiry and to submit an explanation

MARY INSTITUTE OF TECHNOLOGY & SCIENCE
Bogaram (V), Keesara (M), Medchal (D). 501301
www.hits.ac.in Email: principalhitscoe@hmgi.ac.in

HAND BOOK

Subject : ENGINEERING GRAPHICS

Academic Year : 2018-2019

Department:- **MECHANICAL ENGINEERING**
Year :- I-B.Tech (I-Sem)

SUBJECT:- ENGINEERING GRAPHICS

1. Objectives and Relevance

2. Scope

3. Prerequisites

4. Syllabus

5. Suggested Books

6. Unitwise Planner

7. Session Plan

8. Websites

9. Journals

10. Question Bank:-

i. JNTU

ii. GATE

iii. IES

ME104ES/ME204ES: ENGINEERING GRAPHICS

B.Tech. I Year I Sem.	L	T	P	C
	1	0	4	3

Pre-requisites: Nil

Course objectives:

- To provide basic concepts in engineering drawing.
- To impart knowledge about standard principles of orthographic projection of objects.
- To draw sectional views and pictorial views of solids.

Course Outcomes: At the end of the course, the student will be able to:

- Preparing working drawings to communicate the ideas and information.
- Read, understand and interpret engineering drawings.

TEXTBOOKS:

1. Engineering Drawing N.D. Bhatt / Charotar
2. Engineering Drawing / N. S. Parthasarathy and Vela Murali/ Oxford

REFERENCE BOOKS:

1. Engineering Drawing / Basant Agrawal and McAgrawal/ McGraw Hill
2. Engineering Drawing/ M. B. Shah, B.C. Rane / Pearson.
3. Computer Aided Engineering Drawing – K Balaveera Reddy et al – CBS Publishers

UNIT – I

Introduction to Engineering Drawing: Principles of Engineering Graphics and their Significance, Conic Sections including the Rectangular Hyperbola – General method only. Cycloid, Epicycloid and Hypocycloid, Scales – Plain & Diagonal.

UNIT- II

Orthographic Projections: Principles of Orthographic Projections – Conventions – Projections of Points and Lines, Projections of Plane regular geometric figures.—Auxiliary Planes.

UNIT – III

Projections of Regular Solids – Auxiliary Views - Sections or Sectional views of Right Regular Solids – Prism, Cylinder, Pyramid, Cone – Auxiliary views – Sections of Sphere.

UNIT – IV

Development of Surfaces of Right Regular Solids – Prism, Cylinder, Pyramid and Cone,

Intersection of Solids: Intersection of – Prism vs Prism- Cylinder Vs Cylinder.

UNIT – V

Isometric Projections: Principles of Isometric Projection – Isometric Scale – Isometric Views – Conventions – Isometric Views of Lines, Plane Figures, Simple and Compound Solids – Isometric Projection of objects having non- isometric lines. Isometric Projection of Spherical Parts. Conversion of Isometric Views to Orthographic Views and Vice-versa – Conventions

Introduction to CAD: (For Internal Evaluation Weightage only):

Introduction to CAD Software Package Commands.- Free Hand Sketches of 2D- Creation of 2D Sketches by CAD Package.

UNIT WISE PLANNER:

UNIT	DETAILS	HOURS
I	**Introduction to Engineering Drawing:** Principles of Engineering Graphics and their Significance, Conic Sections including the Rectangular Hyperbola – General method only. Cycloid, Epicycloids and Hypocycloid, Scales – Plain & Diagonal.	12
II	Principles of Orthographic Projections – Conventions – Projections of Points and Lines, Projections of Plane regular geometric figures.— Auxiliary Planes.	12
III	Projections of Regular Solids – Auxiliary Views - Sections or Sectional views of Right Regular Solids – Prism, Cylinder, Pyramid, Cone – Auxiliary views – Sections of Sphere	12
IV	Development of Surfaces of Right Regular Solids – Prism, Cylinder, Pyramid and Cone, Intersection of Solids: Intersection of – Prism vs Prism- Cylinder Vs Cylinder	12
V	Principles of Isometric Projection – Isometric Scale – Isometric Views – Conventions – Isometric Views of Lines, Plane Figures, Simple and Compound Solids – Isometric Projection of objects having non- isometric lines. Isometric Projection of Spherical Parts. Conversion of Isometric Views to Orthographic Views and Vice-versa –Conventions **Introduction to CAD: (For Internal Evaluation Weightage only):** Introduction to CAD Software Package Commands.- Free Hand Sketches of 2D- Creation of 2D Sketches by CAD Package	12
TOTAL HOURS		60

TEXT/REFERENCE BOOKS:

T/R	BOOK TITLE/AUTHORS/PUBLICATION
T-1	1. Engineering Drawing N.D. Bhatt / Charotar
T-2	2. Engineering Drawing / N. S. Parthasarathy and Vela Murali/ Oxford
R-1	1. Engineering Drawing / Basant Agrawal and McAgrawal/ McGraw Hill
R-2	2. Engineering Drawing/ M. B. Shah, B.C. Rane / Pearson.
R-3	3. Computer Aided Engineering Drawing – K Balaveera Reddy et al – CBS Publishers

SESSION PLAN:

At the end of the course, the students are able to achieve the following Course Learning Outcomes.

Lecture No.	Topics to be covered	Course Learning Outcomes	Blooms Level	Reference

L1 to L13	Conic sections, Involutes & Scales	Construct the conic sections, plain and diagonal scale	**BT L-3**	R1 &R2
L14 to L25	Points, Lines & Planes	Project the dots, lines and plane surfaces with respect to VP and HP planes	**BT L-3**	R1 &R2
L26 to L 39	Prism & Pyramids	Project the solids with respect to VP and HP planes	**BT L-3**	R1 &R2
L40 to L57	Prism & Pyramids	Project the planes & solids with respect to auxiliary plane	**BT L-3**	R1 &R2
L58 to L76	Prism & Pyramids	Develop the surface of prisms and pyramids	**BT L-3**	R1 &R2
L77	Isometric, Orthographic Projections & CAD	Convert the isometric views into orthographic views and vice versa. Create the 2D sketches using CAD package	**BT L-1**	R1 &R2

Websites

INTERNATIONAL

1. www.graphicsworld.wolfram.com
2. www.planetgraphics.org
3. www.soseg.com
4. www.egform.org/library
5. www.eg.psu.edu
6. www.geocities.com/siliconvalley/2151/graphics.html

NATIONAL

1. www.iitb.ac.in
2. www.iitk.ac.in
3. www.iitm.ac.in
4. www.iitd.ernet.in
5. www.tifr.res.in
6. www.isical.ac.in

JOURNALS

INTERNATIONAL

1. Journal of American Mechanical Society.

2. Journal of differential equations - Elsevier.
3. Pacific Journal of Engineering graphics.
4. Journal of Australian Society.
5. Bulletin of The American Mechanical Society.
6. Bulletin of The Australian Mechanical Society.
7. Bulletin of The London Mechanical Society.
8. Duke Journal of Engineering graphics.
9. International Journal of Engineering graphics and Information Technology.
10. Engineering graphics of Computation
11. Mechanical Logic Quarterly

NATIONAL

1. Journal of Interdisciplinary Engineering graphics.
2. Indian Journal of Pure and Applied Engineering graphics.
3. Indian Journal of Engineering graphics.
4. Indian Academy of Sciences.
5. Current Science (Available in College Library).
6. Differential Equations and Dynamical Systems (Available in College Library).
7. Proceeding of Mechanical Sciences (Available in College Library).
8. Resonance - Journal of Science (Available in College Library)
9. Journal of Mechanical and Physical Sciences.

UNITWISE QUESTION WITH BLOOMS TAXONOMY LELVEL AND PROGRAM OUTCOME

S No.	Question	Blooms Taxonomy Level	Program Outcome
5	The distance between two towns is 225 km. a train covers this distance in 5 hours. Construct a scale to measure off the distance covered by the train in a single minute and up to 1 hour. The scale is drawn to 1/(300000). Show on it the distance covered in 47 minutes.	Analyse	a,i,k
6	A Stone is thrown from a 4m high building and at its highest flight, the stone just crosses the top of a 10 m high tree from the ground. Trace the path of the projectile, if the horizontal distance between the building and the tree is 5m. Find the distance of the point from the building where the stone falls on the ground.	Analyse	a,i
7	Construct a scale of 1:14 to read feet and inches and long enough to measure 7 feet. Show a distance of 5 feet 10 inches on it.	Analyse	a,i,k
8	Draw a straight line AB of any length. Make a point F, 80 mm from AB. Trace the paths of a point P moving in such a way that the ratio of its distance from the point F, to its distance from AB is (a) 3:2 (b) 1 Plot at least 10 points. Name each curve. Draw a normal and a tangent to each curve at a point on it 45mm from F.	Analyse	a,k
9	Inscribe an ellipse in a parallelogram having sides 150 mm and 100 mm long and included angle 120^0. Draw tangent and normal at 60 mm from focus. Also draw a parallel ellipse at 20mm outside the original ellipse.	Analyse	i,k
10	A circle of 40 diameter rolls on the concave side of another circle of 40 radius. Draw the path traced by a point on the generating circle for one complete revolution.	Analyse	a,i
	UNIT-II		
1	The front view and top view of a straight line PQ measures 50mm and 65 mm respectively. The point P is in the HP and 20 mm infront of the VP and the front view of the line is inclined at 45^0 to the reference line. Determine the true length of PQ , true angles of inclination with the reference planes and the trace.	Analyse	a,i
2	A line AB of 70mm long has its end A at 10mm above HP and 15mm infront of VP. Its front view and top view measures 50 & 60 respectively. Draw the projections of the line and determine its inclinations with HP and VP.	Analyse	a,i,k
3	A line PQ inclined at an angle 30^0 to the HP has end P at 15 mm above the HP and 50 mm in front of VP., while the end Q lies in the VP. Draw the projections of the line when the sum of its inclinations with the HP and VP is $90^{0.}$ Determine the true inclination with the reference planes and its traces.	Analyse	a,k
4	A line AB 65 mm long, has its end A, 25 mm above HP and 20 mm in front of VP. The end B is 40 mm above HP and 50 mm in front of VP. Draw its projections and find its inclinations with HP and VP. Determine traces.	Analyse	i,k
5	A hexagonal plane of side 30 mm has a corner on the ground. Its surface is inclined at 450to the HP and the top view of the diagonal through the corner which is in the HP. Makes an angle of 600 with the VP. Draw its projections	Analyse	a,i
6	PQRS is a rhombus having diagonal PR=60 mm and QS= 40 mm and	Analyse	a,i,k

S No.	Question	Blooms Taxonomy Level	Program Outcome
	they are perpendicular to each other. The plane of the rhombus is inclined to H.P. such that its top view appears to be square. The top view of PR makes 300 with the V.P. Draw its projections and determine inclination of the plane with the V.P.		
7	A regular hexagonal lamina with its edge 50 mm has its plane inclined at 450 to H.P and lying with one of its edges in H.P. The plane of one of its diagonals is inclined at 450 to XY. The corner nearest to VP is 15mm in front of it. Draw its projections.	Analyse	a,k
8	A hexagonal plane of side 30 mm has a corner on the ground. Its surface is inclined at $45^0$to the HP and the top view of the diagonal through the corner which is in the HP. Makes an angle of 60^0 with the VP. Draw its projections.	Analyse	i,k
9	A square ABCD of 50 mm side has it's a corner A in the HP, its diagonal AC inclined at 30^0 to the HP. And diagonal BD inclined at 45^0 to the VP. And parallel to the HP. Draw its projections.	Analyse	a,i
10	A regular pentagon of 30 mm sides is resting on H.P on one of it's sides while it's opposite vertex (corner) is 30 mm above HP. Draw the projections when side in H.P is 30^0 inclined to VP.	Analyse	a,i,k
	UNIT-III		
1	A square prism, with the side of its base 40 mm and axis 70 mm long is lying on one of its base edges on the H.P. in such a way that this base edge makes an angle of 45^0 with the V.P. and the axis is inclined at 30^0 to the H.P. Draw its projections.	Analyse	a,i,k
2	A pentagonal prism of side of base 30mm, axis 70mm is resting on one of its base edges in H.P. with its axis inclined at 45^0 to H.P. The top view of the axis is inclined at 30^0 to V.P. Draw the projections.	Analyse	a,k
3	A cone of base diameter 50 mm and axis 60 mm has one of its generators in the VP. And inclined at 300 to the HP. Draw its projections when the apex is 15 mm above the HP. (7.5 MARKS)	Analyse	i,k
4	A square prism base 40 mm side and height 65 mm has its axis inclined at 45^0 to the HP. And has an edge of its base on the HP. and inclined at 300 to the VP. Draw its projections	Analyse	a,i
5	A right circular cone, 40 mm base diameter and 60 mm long axis is resting on H.P on one point of base circle such that its axis makes 45^0 inclination with H.P and 40^0 inclination with V.P. Draw the projections of a cone.	Analyse	a,i,k
6	A cylinder, with a 60 mm base diameter and a 70 mm axis, is resting on its base in the H.P. It is cut by two auxiliary inclined planes which make angles of 60^0 and 45^0 with the H.P. and pass through the top end of the axis. Draw its sectional top view and true shape of the section.	Analyse	a,i
7	A square pyramid base 40 mm side and axis 65 mm long has its base on the HP. And all the edges of the base equally inclined to the VP. it I scut by a section plane perpendicular to the VP. inclined at 45^0 to the HP. And bisecting the axis 35 mm from its base. Draw its sectional top view, sectional side view and true shape of the section.	Analyse	a,i,k
8	A square pyramid of base side 40 mm and axis 60 mm is resting on its base in the HP with a side of the base parallel to the VP. Draw its sectional view and true shape of the section, if it is cut by a section plane	Analyse	a,k

S No.	Question	Blooms Taxonomy Level	Program Outcome
	perpendicular to the VP bisecting the axis and is inclined at 450 to the HP.		
9	A square prism with a base having 40 mm sides and height 60 mm is kept on its base on the H.P. such that one of its rectangular faces makes an angle of 300 with V.P. It is cut by a section plane parallel to V.P. such that the true shape of the section is a rectangle with 30 mm and 60 mm sides. Draw its sectional front view and top view.	Analyse	i,k
10	A cube of 35 mm long edges is resting on the H.P. on one of its faces with a vertical face inclined at 30^0 to the V.P. is cut by a section plane, perpendicular to the V.P, inclined at 45^0 to the H.P. and passing through the top end of the axis. Draw its front view, sectional top view and true shape of the section.	Analyse	a,i
	UNIT-IV		
1	A pentagonal prism, 30 mm base side & 50 mm axis is standing on Hp on its base whose one side is perpendicular to VP. It is cut by a section plane 45^0 inclined to Hp, through midpoint of axis. Draw the development of surface of remaining solid.	Analyse	a,i
2	A cone, 50 mm base diameter and 70 mm axis is standing on its base on HP. It cut by a section plane 45^0 inclined to HP through base end of end generator. Draw projections, sectional views, and true shape of section and development of surfaces of remaining solid.	Analyse	a,i,k
3	A cone 40 mm diameter and 50 mm axis is resting on one of its generator on HP which is parallel to VP. Draw it's projections. It is cut by a horizontal section plane through its base center. Draw sectional TV, development of the surface of the remaining part of cone.	Analyse	a,k
4	Figure 1.0 Shows front view of a cut cylinder with base diameter 60 mm with its axis parallel to V.P. and perpendicular to H. P. Draw the development of the lateral surface of the part P of the cylinder. Fig. 1.0	Analyse	i,k
5	A right regular square prism of 30mm base edge and 60 mm height rests on its base on HP such that its vertical faces are equally inclined to VP. It has a horizontal circular hole of 30 mm diameter drilled centrally through it such that the axis of the hole cuts both the diagonally opposite vertical edges. Develop the lateral surface of the prism showing all construction lines.	Analyse	a,i
6	A square hole with a 25 mm side is cut in a cylindrical drum with a 60 mm diameter and 70 mm height. The faces of the hole are inclined at 45^0 to the H.P. and axis intersects with that of the drum at right angles. Draw the development of its lateral surface.	Analyse	a,i,k
7	A cylinder 50mm diameter and 70mm axis is completely penetrated by	Analyse	a,k

S No.	Question	Blooms Taxonomy Level	Program Outcome
	another of 40 mm diameter and 70 mm axis horizontally. Both the axes intersect and bisect each other. Draw projections showing curves of intersections.		
8	A cylinder of 80 mm diameter and 100 mm axis is completely penetrated by a cone of 80 mm diameter and 120 mm long axis horizontally. Both axes intersect & bisect each other. Draw projections showing curve of intersections.	Analyse	i,k
9	A cylinder 50mm diameter and 70mm axis is completely penetrated by a triangular prism of 45 mm sides and 70 mm axis, horizontally. One flat face of prism is parallel to VP and Contains axis of cylinder. Draw projections showing curves of intersections.	Analyse	a,i
10	A vertical cone, base diameter 75 mm and axis 100 mm long, is completely penetrated by a cylinder of 45 mm diameter. The axis of the cylinder is parallel to HP and VP and intersects axis of the cone at a point 28 mm above the base. Draw projections showing curves of intersection.	Analyse	a,i,k
	UNIT-V		
1	Draw the Front View, Top View and Both Side Views for the following figure. (All dimensions are in mm)	Analyse	a,i,k
2	A hexagonal plane of side 30 mm stands vertically on ground plane on an edge and a corner 10 mm behind the picture plane. The surface of the plane makes an angle of 45^0 with the picture plane. The station point is 60 mm infront of picture plane, 75 mm above the ground plane and lies in a central plane which is 40 mm towards right of the centre of the plane. Draw its perspective view.	Analyse	a,k
3	A pentagonal pyramid with edge of base 40 mm and axis 70 mm long, is resting on its base on H.P. One of the base edges of the pyramid is perpendicular to V.P. A section plane, perpendicular to V.P. and inclined to H.P. at 30^0, passes through the axis, at a height of 30 mm from the base. Draw the isometric view of the truncated pyramid.	Analyse	i,k
4	Draw a perspective view of a square plane of side 50 mm resting on the ground plane with one of its corners touching picture plane and a side right to the corner inclined at 60^0 to it. The station point is 70 mm infront of picture plane, 65 mm above ground plane and lies in a central plane which is 35 mm towards right of the corner touching the picture plane.	Analyse	a,i
5	A square pyramid of base edges 50 mm long and attitude 70 mm is resting on its base on the ground with one of the corners of the base touching the picture plane. Two adjacent base edges having this corner make equal inclination with V.P. The station point lies on the central line of the object 60 mm in front of the picture plane and 90 mm above the ground. Draw the perspective projection of the	Analyse	a,i,k

S No.	Question	Blooms Taxonomy Level	Program Outcome
	solid.		
6	A cone, diameter of base 45mm and height 50mm is mounted centrally on the top of a square slab of thickness 10mm & side 65mm. Draw the isometric projection of the combined solid.	Analyse	a,i
7	A cone of base diameter 60 mm and height 70 mm is resting on its base on HP. It is cut by a plane perpendicular to the VP and inclined at 30^0 to the HP. The plane meets the axis at a distance of 25 mm from the apex. Draw the isometric view of the truncated cone.	Analyse	a,i,k
8	Figure 1.0, shows an isometric view of an object. Draw the following views. i) Front view in direction of arrow, ii) Top view, and iii) Side view from right. 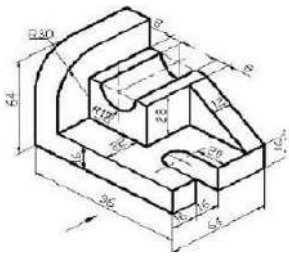 Fig 1.0	Analyse	a,k
9	Figure 2.0, shows an isometric view of an object. Draw the following views. i) Front view in direction of arrow, ii) Top view, and iii) Side view from left. 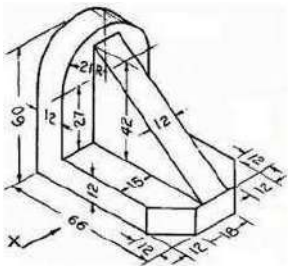 Figure 2.0	Analyse	i,k
10	Figure 3.0, shows an isometric view of an object. Draw the following views. i) Front view in direction of arrow, ii) Top view, and iii) Side view from right. 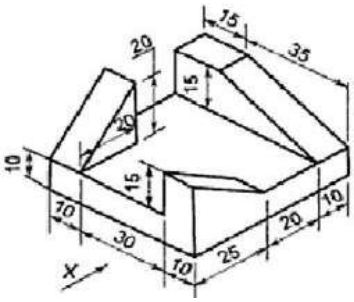 Figure 3.0	Analyse	a,i

OBJECTIVE QUESTIONS

1. The arrangement showing below the pencils in order of increasing hardness is
   i) HB,H,2H,3H ii) 3H,2H,HB,H iii) 2H,HB,H,3H iv) H,2H,3H,HB
   2 Marks
1. In which one of the following conditions of the eccentricity the curve obtained will be hyperbola?
   e=1 ii.e=5/2 iii.e=2/3 iv.e=0 **2 Marks**
3. The plan and elevation of a point are below the reference line.The point is situated in which quadrant
   i) I ii) II iii) III iv) IV **2 Marks**
4. Which one of the following is not a solid of revolution
   i) Cone ii) Pyramid iii) Cylinder iv) Sphere
   2 Marks
5. The angle between isometric axis is
   i) 45˚ ii) 60˚ iii) 75˚ iv) 120˚
6. Which one of the following is not a solid of revolution **2 Marks**
   i) Cone ii) Pyramid iii) Cylinder iv) Sphere
   7. Sector of circle is the development of a : **2 Marks**

   i)Cylinder ii) Cone iii) Prism iv) Pyramid

SHORT ANSWER QUESTIONS

UNIT-1

1. Write the following words in single stroke vertical capital letters of 12 mm size.
   "**National thermal power station."** **7 marks**

a) The arrangement showing below the pencils in order of increasing hardness is
   i) HB,H,2H,3H ii) 3H,2H,HB,H iii) 2H,HB,H,3H iv) H,2H,3H,HB
   2 Marks

b) Write the following words in single stroke inclined capital letters of 15 mm size.
   "**Practice makes the man perfect."** **7 marks**

c) Draw an object showing different types of lines used in engineering drawing. **7 marks**

d) Enlist the types of lines with sketches & state at least one use of each of them. **7 marks**

e) Define aligned and unidirectional dimensioning system with neat sketch. **7 marks**

f) What are the standards sizes of drawing sheet as per BIS? Draw a 125 mm line and divide into seven equal parts. **7 marks**

g) Draw the symbols for:

1. Asbestos 2.celing fan 3.revolving door 4.bell 5.glass 6.spot weld 7.marble 8.wash basin 9.tension spring 10.reduccer 11.buzzer 12.steel 13.horn 14.sliding door.

a) A ball thrown up in the air reaches a maximum height of 45 meters and travels a horizontal distance of 75 meters. Trace the path of the ball. Assuming it to be Parabolic. (DEC –JAN2009-10) **7 marks**

b) The major and minor axes of an ellipse are 100 and 60 MM respectively. Draw the curve. **7 marks**

c) A thread wrapped around a circle 8 cm is unwound keeping it tight Draw the curve traced out by the end of the thread for one complete revolution. Also name the curve.**7 marks**

h) In which one of the following conditions of the eccentricity the curve obtained will be hyperbola?
e=1 ii.e=5/2 iii.e=2/3 iv.e=0 **2 marks**

UNIT-2

a) The top view of 75mm long AB measures 65mm, while the length of its front view is 50mm. It's one end A is in the H.P. and 12mm in front of the V.P. draw the projections of AB and determine its inclination with the H.P. & V.P.
7 marks

b) Draw the projection of point A is 20 mm behind the V.P. and 40 mm above the H.P.

c) The plan and elevation of a point are below the reference line.The point is situated in which quadrant

i) I ii) II iii) III iv) IV **2 Marks**

d) A line AB 65 mm long is inclined 35 ° to HP and in the VP. Point A is both HP and VP. Draw its projections. **7 marks**

e) A thin rectangular plate of sides 80x 40 mm has its shorter edge in the V.P. and inclined at 30^0 to the H.P. draw its top view if its front view is a square of 40 mm side. **7 marks**

f) Draw the projection of a circle of 50 mm diameter, resting in the HP. On a point of its circumference. Its plane inclined 45 °to the HP and perpendicular to the VP. **7 marks**

g) Draw the projection of point A is 2 cm below the hp and 3 cm behind the HP. **7 marks**

h) A line AB 60mm long has its end A in both the H.P. and V.P. it is inclined at 45^0 to the H.P. and 30^0 to V.P. draw the projection of the line AB
7 marks

i) Which one of the following is not a solid of revolution
i) Cone ii) Pyramid iii) Cylinder iv) Sphere
2 Marks

UNIT -3

a) Draw the projections of a cone, base 45 mm diameter and axis 60 mm long. Laying on the HP on one its generators with the axis parallel to the VP. **10 marks**

b) A pentagonal pyramid base 25 mm side axis 50 mm long has one of its triangular faces in the VP .and the edge of the base contained that face makes an angle of 30 to the HP. Draw the projections. **10 marks**

c) Draw the projection of pentagonal prism base 30 mm side and axis 60 mm long resting on one of its rectangular face on the ground with the axis inclined at 45° to the VP. **10 marks**

d) Which one of the following is not a solid of revolution
i) Cone ii) Pyramid iii) Cylinder iv) Sphere **2 marks**

a) A cone base 60 mm diameter, axis 70 mm, rests on HP on its base. It is cut away by a cutting plane. Perpendicular to VP making 80 ° with the HP and passing through the apex. Draw
   1. Sectional front view
   2. Sectional top view
   3. The true shape of the section **7 marks**

b) A pentagonal pyramid base 30 mm side and axis 65 mm long has its base horizontal and an edge of the base parallel to the VP.A horizontal section plane cuts it at a distance of 25 mm above the base. Draw its front view and section top view. **7 marks**

c) A square pyramid base 40 mm side and axis 80 mm long has its base on the ground and all edges of the base equally inclined to the VP. It is cut by a section plane perpendicular to VP inclined at 60° to the HP and bisecting the axis. Draw its top view, sectional side view and true shape of section. **7 marks**

d) Sector of circle is the development of a :
   i)Cylinder ii) Cone iii) Prism iv) Pyramid **2 Marks**

UNIT-4

a) Draw the development of lateral surface of the hexagonal prism of 50mm long and base 20 mm side and cut by a plane which parallel to the VP and incline 45 ° to the HP. Which is passing through the middle of the axis? It is resting on its base on the HP.**7 marks**

b) Draw the development of the lateral surface of the cylinder of 20 mm dia and 50 mm long which on the HP on its base and cut by a plane which is parallel to VP and 45 ° to the HP and passing through the centre of the axis of cylinder. **7 marks**

c) A right cylinder of 30 mm diameter and 35 mm height of axis is cut by a sectional plane inclined 30 ° to HP and passes 18 mm .from the base along the axis .draw the development of trunked cylinder. **7 marks**

UNIT -5

1) The angle between isometric axis is
   i) 45˚ ii) 60˚ iii) 75˚ iv) 120˚
   2 marks

2) Draw the orthographic projection.
   Draw front view, top view and side view. **7 marks**

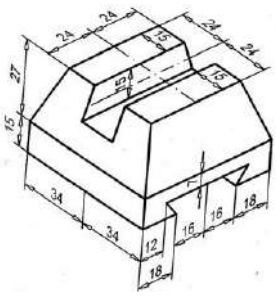

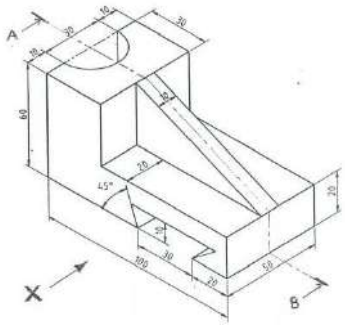

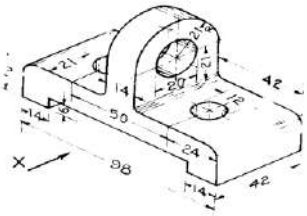

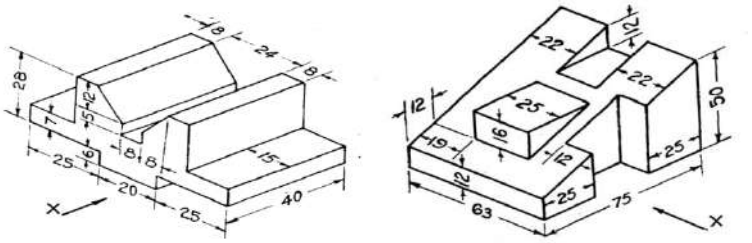

d) Draw isometric projection. **7 marks**

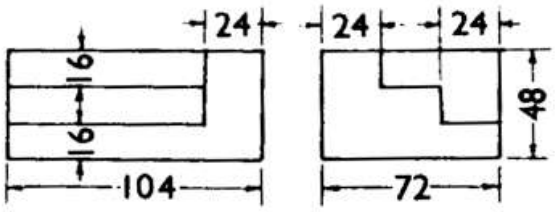

1. ASSIGNMENT QUESTIONS

2. The distance between Delhi and Agra is 200 km. In a railway map it is represented by a line 5 cm long. Find it's R.F. Draw a diagonal scale to show single km. And maximum 600 km. Indicate on it following distances. 1) 222 km 2) 336 km 3) 459 km 4) 569 km.

3. Point f is 50 mm from a line AB .A point p is moving in a plane such that the *ratio* of it's distances from f and line AB remains constant and equals to 2/3 draw locus of point p { eccentricity = 2/3 } and Tangent and Normal.

4. Line AB is 75 mm long .It's FV and TV measure 50 mm & 60 mm long respectively. End A is 10 mm above HP and 15 mm in front of VP. Draw projections of line and traces AB if end B is in first quadrant. Find angle with Hp and VP.

5. A regular pentagon of 30 mm sides is resting on HP on one of it's sides with it's surface 45^0 inclined to HP. Draw it's projections and auxiliary top view when the side in HP makes 30^0 angle with VP.

6. A room of 1728 m^3 volume is shown by a cube of 216 cm^3 volume. Find R.F. and construct a plain scale to measure up to 42 m. Mark a distance of 22 m on the scale.

7. Inscribe an ellipse in a parallelogram having sides 150 mm and 100 mm long and an included angle of 120°.

8. Two oranges on a tree are respectively 1.8 m and 3 m above the ground, and 1.2 m and 2.1 m from a 0.3 m thick wall, but on the opposite sides of it. The distance between the oranges, measured along the ground and parallel to the wall is 2.7 m. Determine the real distance between the oranges.

2. ASSIGNMENT QUETIONS

1. A cube of 80 mm long edges has its vertical faces equally inclined to the VP. It is cut by an AIP in such a way that the true shape of the cut part is a regular hexagon. Determine the inclination of the cutting plane with the HP. Draw FV, sectional TV and true shape of the section.
2. A right circular cone, 70 mm base and 70 mm height, rests on its base on the ground plane. A section plane perpendicular to VP and inclined at 45° to HP cuts the cone, bisecting its axis. Draw the development of the lateral surface of the cone.
3. Draw the isometric views of a frustum of a pentagonal pyramid of bottom base of 40 mm side and top base of 20 mm side and of height 50 mm.
4. Draw the FV, TV and SVs of the solid component shown in figure below.

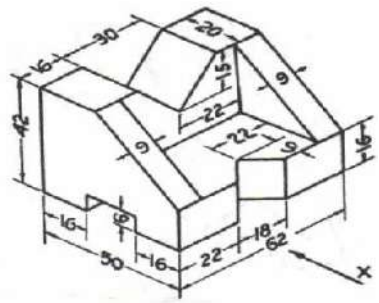

5. Draw the front view, side view and top view of the objects shown pictorially .

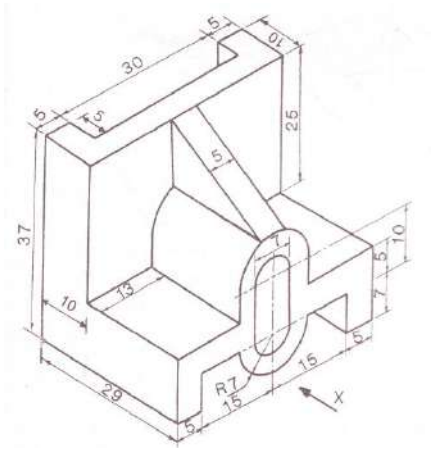

ASSIGNMENT QUESTIONS

<u>UNIT-I</u>

1. On a Russian map, a scale of verse is shown. On measuring it with a metric scale, 120 versts are found to measure 10 cm. Construct comparative scales for

the two units to measure upto
150 versts and 150 km respectively. 1 verst = 1.067 km.

2. Draw a triangle having sides 8cm, 9cm and 10cm long respectively and measure its anles with the aid of a scale of chords.

3. The Distance between Vadodara and Surat is 130km. A train covers this distance in 2.5 hours.
Construct a plain scale to measure time upto a single minute. The R.F. of the scale is 1/260000. Find the distance covered by the train in 45 minutes.

4. On a building plan, a line 20cm long represents a distance of 10m. Devise a diagonal scale fot the plan to read upto 12 m, showing metres, decimeters and centimeters. Show on your scale the lengths 6.48 m and 11.14 m.

5. The actual length of 500m is represented by a line of 15cm on drawing. Construct a vernier scale to read upto 600m. Mark on the scale a length of 549m.

6. Draw a vernier scale of R.F.= 5 to read 1/5cm and 1/25cm and to measure upto 5cm. Mark on the scale distances of 2.12cm.

7. Draw a straight line AB of any length. Mark a point F, 65 mm from AB. Trace the paths of a point P moving in such a way, that the ratio of its distance from the point F, to its distance from AB is (i) 1; (ii) 3:2 (iii) 2:3 plot at least 8 point on it, 50mm from F.

8. Show by means of a drawing that when the diameter of the directing circle is twice that of the generating circle, the hypocycloid is a straight line. Take the diameter of the generating circle equal to 50 mm.

9. A circle of 50mm diameter rolls on a horizontal line for a half revolution and then on a vertical line for another half revolution. Draw the curve traced out by a point P on the circumference of the circle.

10. Draw an involute of a circle of 40mm diameter. Also, draw a normal and a tangent to it at a point 100 mm from the centre of the circle.

UNIT-II

1. A line AB, 75 mm long, is inclined at 450 to the H.P. and 300 to the V.P. Its end B is in the H.P. and 40mm in front of the V.P. Draw its projections and determine its traces.

2. Draw the projections of a line AB, 90mm long, its mid-point M being 50mm above the H.P. and
40mm in front of the V.P. The end A is 20mm above the H.P. and 10mm in front of the V.P. show the traces and the inclinations of the line with the H.P. and the V.P

3. The front view of a 125mm long line PQ measures 75mm and its top view measures 100mm.

Its end Q and the mid-point M are in the first quadrant, M being 20mm from both the planes. Draw the projections of the line PQ.

4. The top view of a 75mm long line CD measures 50mm. C is 50mm in front of the V.P. and 15mm below the H.P. D is 15 mm in front of the V.P. and is above the H.P. Draw the front view of CD and find its inclinations with the H.P. and the V.P. show also its traces.

5. A line AB, 65mm long has its end A in the H.P. and 15mm in front of the V.P. The end B is in the third quadrant. The line is inclined at 30^0 to the H.P. and at 60^0 to the V.P. Draw its projections.

6. The front view of a line AB measures 65mm and makes an angle of 45^0 with xy. A is in the H.P. and the V.T. of the line is 15mm below the H.P. The line is 30^0 to the V.P. Draw the projections of AB and find its true length and inclination with the H.P. Also locate its H.T.

7. A line AB is in the first quadrant. Its end A and B are 20mm and 60mm in front of the V.P. respectively. The distance between the end projectors is 75mm. The line is inclined at 300 to the H.P. and its H.T. is 10mm above xy. Draw the projections of AB and determine its true length and the V.T.

8. A room is 4.8m x 4.2m x 3.6m high. Determine graphically the distance between a top corner and the bottom corner diagonally opposite to it.

9. Two oranges on a tree are respectively 1.8m and 3m above the ground and 1.2m and 2.1m from a 0.3m thick wall, but on the opposite sides of it. The distance between the oranges, measured along the ground and parallel to the wall is 2.7m. Determine the real distance between the oranges.

10. A line PQ is 75mm long and lies in an auxiliary inclined plane (A.I.P) which makes an angle of 450 with the H.P. The front view of the line measures 55mm and the end P is in the V.P. and 20 mm above the H.P.
Draw the projections of PQ and find (i) its inclinations with both the planes and (ii) its traces.

UNIT-III

1. Draw an equilateral triangle of 75mm side and inscribe a circle in it. Draw the projections of the figure, when its plane is vertical and inclined at 30^0 to the V.P. and one of the sides of the triangle is inclined at 45^0 to the H.P.

2. A regular hexagon of 40mm side has a corner in the H.P. Its surface is inclined at 45^0 to the H.P. and the top view of the diagonal through the corner which is in the H.P. makes an angle of 60^0 with the V.P. Draw its projections.

3. Draw the projections of a regular pentagon of 40mm side, having its surface inclined at 30^0 to the H.P. and a side parallel to the H.P. and inclined at an angle

of 60^0 to the V.P.

4. Draw the projections of a rhombus having diagonals 125mm and 50mm long, the smaller diagonal of which is parallel to both the principal planes, while the other is inclined at 300 to the H.P.

5. Draw a regular hexagon of 40mm side, with its two sides vertical. Draw a circle of 40mm diameter in its centre. The figure represents a hexagonal plate with a hole in it and having its surface parallel to the V.P. Draw its projections when the surface is vertical and inclined at 30^0 to the V.P. Assume the thickness of the plate to be equal to that of a line.

6. A rectangular block 75mm x 50mm x 25mm thick has a hole of 30mm diameter drilled centrally through its largest faces. Draw the projections when the block has its 50mm long edge parallel to the H.P. and perpendicular to the V.P. and has the axis of the hole inclined at 60^0 to the H.P.

7. Draw three views of an earthen flower pot, 25cm diameter at the top, 15cm diameter at the bottom, 30cm high and 2.5cm thick, when its axis makes an angle of 30^0 with the vertical.

8. A tetrahedron of 75mm long edges has one edge parallel to the H.P. and inclined at 450 to the
V.P. while a face containing that edge is vertical. Draw its projections.

9. A Pentagonal prism is resting on a corner of its base on the ground with a longer edge containing that corner inclined at 450 to the H.P. and the vertical plane containing that edge and the axis inclined at 300 to the V.P. Draw its projections. Base 40mm side; height 65mm.

10. A frustum of a pentagonal pyramid, base 50mm side, top 25mm side and axis 75mm long, is placed on its base on the ground with an edge of the base perpendicular to the V.P. Draw its projections. Project another top view on a reference line parallel to the line which shows the true length of the slant edge. From this top view, project a front view on an auxiliary vertical plane inclined at 45^0 to the top view of the axis.

UNIT-IV

1. A cube of 50mm long edges is resting on the H.P. with a vertical face inclined at 300 to the V.P.
It is cut by a section plane, perpendicular to the V.P., inclined at 300 to the H.P. and passing through a point on the axis, 38mm above the H.P. Draw the sectional top view, true shape of the section and development of the surface of the remaining portion of the cube.

2. A hexagonal prism, side of base 35mm and height 75mm is resting on one of its corners on the H.P. with a longer edge containing that corner inclined at 600 to the H.P. and a rectangular face parallel to the V.P. A horizontal section plane cuts the prism in two equal halves.
(i) Draw the front view and sectional top view of the cut prism.

(ii) Draw another top view on an auxiliary inclined plane which makes an angle of 450 with the
H.P.

3. A hollow square prism, base 50mm side (outside), length 75mm and thickness 9mm is lying on the H.P. on one of its rectangular faces, with the axis inclined at 300 to the V.P. A section plane, parallel to the V.P. cuts the prism, intersecting the axis at a point 20mm from one if its ends. Draw the top view and sectional front view of the prism.

4. A Cube of 65mm diameter and 90mm long, has its axis parallel to the H.P. and inclined at 300 to the V.P. It is cut by a vertical section plane in such a way that the true shape of the section is an ellipse having the major axis 75mm long. Draw its sectional front view and true shape of the section

. 5 A pentagonal pyramid, base 30mm side and axis 75mm long, has its base horizontal and an edge of the base parallel to the V.P. It is cut by a section plane, perpendicular to the V.P. inclined at
600 to the H.P. and bisecting the axis. Draw the front view and the top view when the pyramid is titled so that it lies on its cut-face on the ground with the axis parallel to the V.P. Show the shape of the section by dotted lines. Develop the surface of the truncated pyramid.

6. A tetrahedron of 65mm long edges is lying on the H.P. on one of its faces, with an edge perpendicular to the V.P. It is cut by a section plane which is perpendicular to the V.P. So that the true section plane which is perpendicular to the V.P. so that the true shape of the section is an isosceles triangle of base 50mm long and altitude 40mm. Find the inclination of the section plane with the H.P. and draw the front view, sectional top view and the true shape of the section.

7. A cone, base 75mm diameter and axis 75mm long, has its axis parallel to the V.P. and inclined at
450 to the H.P. A horizontal section plane cuts the cone through the mid-point of the axis. Draw the front view, sectional top view and an auxiliary top view on a plane parallel to the axis.

8. A hemisphere of 65mm diameter lying on the H.P. on its flat face, is cut by a vertical section plane inclined to the V.P. so that the semi-ellipse seen in the front view has its minor axis 45mm long and half major axis 25mm long. Draw the top view, sectional front view and true shape of the section.

9. A sphere of 75mm diameter is cut by a section plane, perpendicular to the V.P. and inclined at
300 to the H.P. in such a way that the true shape of the section is a circle of 50mm diameter. Draw its front view, sectional top view and sectional side view.

10. A frustum of a cone base 75mm diameter, top 50mm diameter and axis 75mm long, has a hole of 30mm diameter drilled centrally through its flat faces. It is resting on its base on the H.P. and is cut by a section plane, the V.T. of which makes an angle of 60^0 with xy and bisects the axis. Draw its sectional top view and an auxiliary top view on a reference line parallel to the V.T. showing clearly the shape of the section.

UNIT-V

1. Draw the isometric projection of (i) a rectangle of 80 and 50 sides, its plane being horizontal and
   (ii) a regular pentagon of 25 side, its plane being vertical and one of its sides, horizontal.

2. A hexagonal prism of side of base 30 and 70 long, has a concentric square hole of side 20. One face of the square hole is parallel to a face of the prism. Draw the isometric view of the solid.

3. Draw an isometric projection of frustum of a hexagonal pyramid with its base and top surfaces as hexagons of sides 80 and 40 respectively and height 70.

4. A hemi-sphere of 60 diameter, is resting on a point on the top of an octagonal slab of side of base 30 and 30 height. Another hemi-sphere of 40 diameter, is placed on the flat surface of the above hemi-sphere with its flat surface at the top. Draw the isometric projection of the combination of solids.

5. A triangular prism, with edge of base 40 and 80 long, lies on one of its base edges on H.P. and the rectangular face containing that edge is inclined at 600 to H.P. Taking the resting edge normal to V.P. draw the isometric projection of the solid.

6. A pentagonal pyramid of 40 side of base and height 70, rests with its base on H.P. One edge of the base is perpendicular to V.P. A section plane perpendicular to V.P. and inclined at 300 to H.P, cuts the axis of the pyramid at a point 30 above the base. Draw the isometric projection of the solid.
7. Draw the isometric projection of a cylinder of 75 diameter and 100 long, with a concentric 20 square hole. The cylinder is lying on H.P. with its axis parallel to V.P. and the side of the cone.

8. Draw the isometric projection of a sphere of 60 diameter, resting centrally on the top of a square prism of base 60x60 and 20 height.

9. A paper weight consists of three portions. Bottom-most portion is a hexagonal prism of side of base 60 and height 15. Middle portion is the frustum of a hexagonal pyramid of base 60 side,
   and side at the top 50; height being 25. Top portion is a hemi-sphere, touching all the sides of the hexagon. Draw the isometric projection of the solid.
10. A cone of base 20 diameter and 30 high, rests on the frustum of a hexagonal pyramid of base 25 side, 15 side at the top and 25 height such that, their axes coincide. Draw the isometric

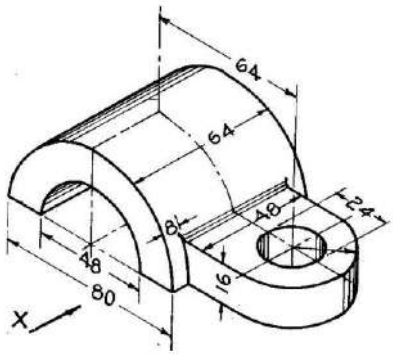

FIG. 20-42

into Orthographic

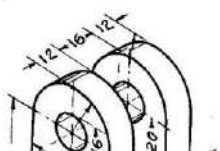

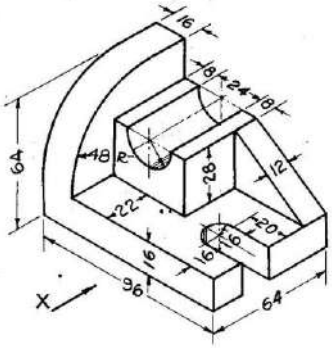

FIG. 20-41

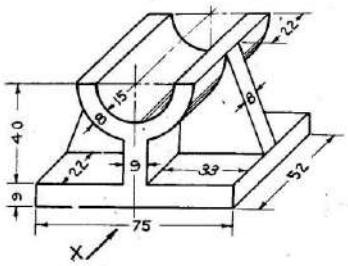

FIG. 20-40

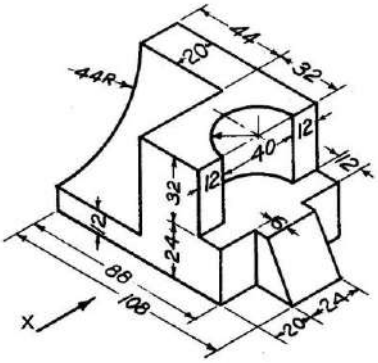

FIG. 20-44

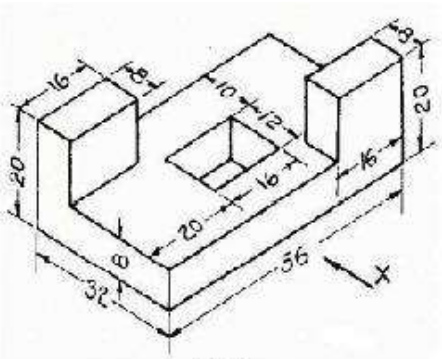

Figure 8

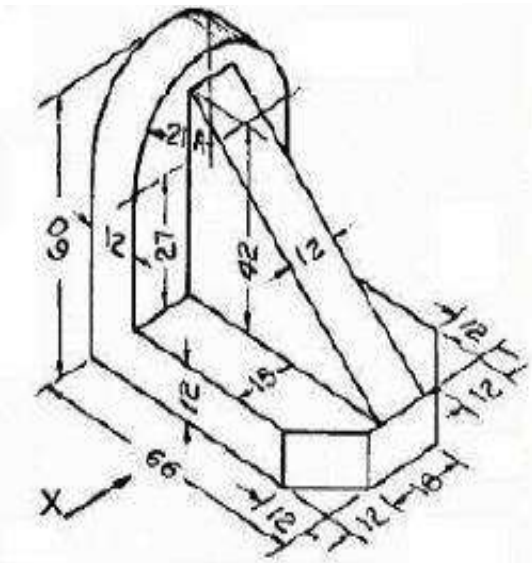

Figure 8

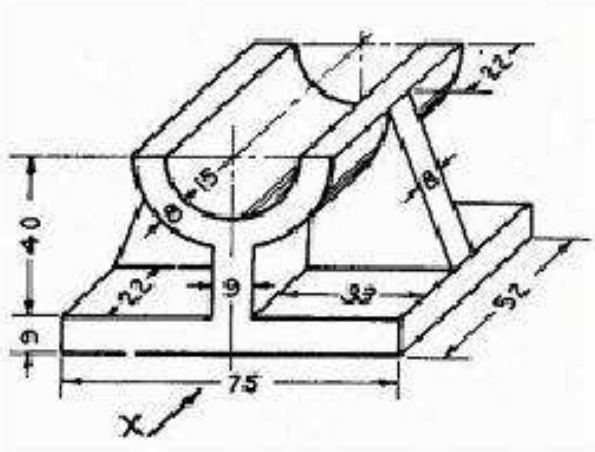

Figure 8

MID-1

Figure 8

S.No.	Question	Blooms Taxonomy	Program Outcome	Course Outcom
1	The distance between Delhi and Agra is 200 km. In a railway map it is represented by a line 5 cm long. Find it's R.F. Draw a diagonal scale to show single km. And maximum 600 km. Indicate on it following distances. 1) 222 km 2) 336 km 3) 459 km 4) 569 km.	Analyse	i,k	1,3,5
2	Point f is 50 mm from a line AB .A point p is moving in a plane such that the *ratio* of it's distances from f and line AB remains constant and equals to 2/3 draw locus of point p { eccentricity = 2/3 } and Tangent and Normal.	Analyse	a,i,k	2,4
3	Line AB is 75 mm long .It's FV and TV measure 50 mm & 60 mm long respectively. End A is 10 mm above HP and 15 mm in front of VP. Draw projections of line and traces AB if end B is in first quadrant. Find angle with Hp and VP.	Analyse	a,i	4,5
4	A regular pentagon of 30 mm sides is resting on HP on one of it's sides with it's surface 45^0 inclined to HP. Draw it's projections and auxiliary top view when the side in HP makes 30^0 angle with VP.	Analyse	a,i,k	,4,5

MID-2

S.No.	Question	Blooms Taxonomy	Program Outcome	Course Outcom
1	**A cube of 80 mm long edges has its vertical faces equally inclined to the VP. It is cut by an AIP in such a way that the true shape of the cut part is a regular hexagon. Determine the inclination of the cutting plane with the HP. Draw FV, sectional TV and true shape of the section.**	Analyse	ai,k	1,3
2	**A right circular cone, 70 mm base and 70 mm height, rests on its base on the ground plane. A section plane perpendicular to VP and inclined at 45° to HP cuts the cone, bisecting its axis. Draw the development of the lateral surface of the cone.**	Analyse	i,k	2,4
3	**Draw the isometric views of a frustum of a pentagonal pyramid of bottom base of 40 mm side and top base of 20 mm side and of height 50 mm.**	Analyse	a,i	4,5
4	**Draw the FV, TV and SVs of the solid component shown in figure below.** 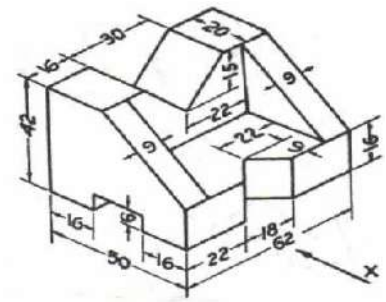	Analyse	a,i,k	1,4,5

TUTORIAL QUETIONS

UNIT - I

1. The major axis of an ellipse is 150 mm long and the minor axis is 100 mm long. Find the foci and draw the ellipse by 'arcs of circles' method. Draw a tangent to the ellipse at a point on it 25 mm above the major axis.
(JNTU June 2010)

2. Draw an epicycloid of a circle of 40mm diameter, which rolls outside on another circle of 120mm diameter for one revolution clock-wise. Draw a tangent and a normal to it at a point 90mm from the centre of the directing circle.
(JNTU June 2010)

3. Two points A and B are 100mm apart. A point C is 75 mm from A and 60 mm from B. Draw an ellipse passing through A, B and C.
(JNTU June 2010)

4. Show by means drawing that when the diameter of the directing circle is twice that of the generating circle, the hypocycloid is a straight line. Take the diameter of the generating circle equal to 50mm.
(JNTU June 2010)

5. Draw a rectangle having its sides 125 mm and 75 mm long. Inscribe two parabolas in it with their bisecting each other.
(JNTU June 2010)

6. A circle of 50 mm diameter rolls on a horizontal line for a half revolution and then on a vertical line for another half revolution. Draw the curve traced out by a point P on the circumference of the circle.
(JNTU June 2010)

7. Two straight lines OA and OB make an angle of 75 between them. P is a point 40 mm from OA and 50 mm from OB. Draw a hyperbola through P, with OA and OB as asymptotes, making at least ten points.
(JNTU June 2010)

8. A circus man rides a motor cycle inside a globe of 5m diameter. The wheel of the motor cycle is 0.8 m in dia. Draw the locus of a point on the circumference of the motor cycle wheel for its one complete turn on the maximum diameter path.
(JNTU June 2010)

9. Two fixed points A and B are 100mm apart. Trace the complete path of a point P

moving (in the same plane as that of A and B) in such a way that, the sum of its distances from A and B is always the same and equal to 125mm. Name the curve. Draw another parallel to and 25mm away from this curve. **(JNTU June 2009)**

10. A circle of 50mm diameter rolls on a horizontal line for half a revolution clock wise and then on a line inclined at 60o to the horizontal for another half, clockwise. Draw the curve traced by a point P on the circumference of the circle, taking the top-most point on the rolling circle as the initial position of the generating point. **(JNTU June 2009)**

11. The vertex of a hyperbola is 65 mm from its focus. Draw the curve if the eccentricity is 3/2.
Draw a normal and tangent at a point on the curve, 75 mm from the directrix.
(JNTU June 2009)

12. A circle of 50mm diameter rolls along a straight line without slipping. Draw the curve traced out by a point P on the circumference, for one complete revolution of the circle. Name the curve. Draw a tangent to the curve at a point on it 40mm from the line. **(JNTU June 2009)**

13. The foci of an ellipse are 90mm apart and the minor axis is 65 mm long. Determine the major axis and draw the ellipse by concentric circles method and the other half by Oblong methods. Draw a tangent to the ellipse at a point 25mm above the major axis **(JNTU June 2009)**

14. A circle of 40mm diameter rolls on the concave side of another circle of 40mm radius. Draw the path traced by a point on the generating circle for one complete revolution. .
(JNTU June 2009)

15. A stone is thrown from a height of 5 meter above the ground. It reaches a maximum height of
10 meter and cover a horizontal distance of 20 meter from the point of lift. Draw the curve traced by the stone. What is the eccentricity of this curve? Name and draw a new curve whose eccentricity is 1.5 times the eccentricity of the above curve. **(JNTU June 2009)**

16. A circle of 115 mm diameter rolls on another circle of 75 mm diameter with internal contact.
Draw the locus of point on the circumference of a rolling circle for its one complete revolution.
(JNTU June 2009)

17. The major axis of an ellipse is 150mm long with P as its mid point. The foci of ellipse are 50mm away from mid point .Draw the ellipse. .
(JNTU June 2009)

18. A circus man rides a motor bike inside a globe of 12meters diameter .The motor bike has the wheel of 1 meter diameter .Draw the locus of the point on the circumference of the motor bike wheel for one complete revolution. **(JNTU June 2009)**

19. Two points A and B lie on a straight line through the centre C of a circle of 50mm diameter, rolling along a fixed straight line. Draw and name the curves traced out by the points A and B during one complete revolution of the circle. AC =30mm; BC=52mm **(JNTU June 2009)**

20. A fixed point is 80mm from a fixed straight line. Draw the locus of a point P moving in such a way that its distance from the fixed straight line is twice its distance from the fixed point
(JNTU June 2009)

UNIT – II

1. a) Two points A and B are on H.P, the point A being 30mm in front of V.P while B is 45mm behind V.P. The line joining their top views makes an angle 45^0 with xy. Find the horizontal distance between the two points.
b) A line AB measuring 70 mm has its end A 15 mm in front of VP and 20 mm above HP, and the other end B, 60 mm in front of VP and 50mm above HP. Draw the projections of the line and find the inclinations of the line with both the reference planes of projection. **(JNTU June 2010)**

2. a. Two points A and B are on HP, the point a being 30mm in front of VP while B is 45mm behind VP. The line joining their top views makes an angle of 450 with x y. Find the horizontal distance between the two points.
b. A line AB of 100mm length is inclined at an angle of 300 to HP and 450 to VP. The point A is
15mm above HP and 20mm in front of VP. Draw the projections of line. **(JNTU June 2010)**

3. A line AB 80 mm long has its end A both in HP and VP, and inclined at 30^0 to HP and 45^0 to VP.
Draw the projections of the line AB. Find the apparent inclinations of the top and front views with the XY line. Also measure the distance between the end projectors through A and B in the top view.
(JNTU June 2010)

4. The top view of 75 mm long line AB measures 65 mm, while the length of its front view is 50 mm its one end A is in the HP and 12 mm in front of VP. Draw the projections of AB and determine its inclinations with the HP and the VP.
(JNTU June 2010)

5. a) A line PQ 75 mm long, has its end P in the VP and the end Q in the HP. The line is inclined at
300 to the HP and at 600 to the VP. Draw its
projections. b] State the quadrants in which the
following are situated.
i] A point P; its top view 40 mm above x y; the front view, 20mm below
the top view.
ii] A point Q; its projections coincide with each other 40 mm below x y. **(JNTU June 2009)**

6 Draw the projection of a rhombus having diagonals 125mm and 50mm long, the

smaller diagonal of which is parallel to both the principal planes, while the other is inclined at 300 to the HP.

(JNTU June 2009)

7 a) A point is equidistant from the three principal planes. The view from the above is below x y and the view from the front above x y. The linear distance between the above two views measuring 80mm. Draw the three principal views.
b) A 100mm long line is parallel to and 50mm above the H.P its two ends are 25mm and 50mm in front of the VP. Draw its projections and find its inclination with the VP. **(JNTU June 2009)**

8 a) A point A is on H.P and 40mm in front of V.P. Another point B is on V.P. and below H.P. the line joining their front views makes an angle of 45° with XY, while the line joining their top views makes an angle of 30°. Find the distance of the point B from H.P.
b) A line PQ has its end P, 15mm above HP and 10mm in front of VP. The end Q is 55mm above HP and the line is inclined at 30o to HP. The distance between the end projectors of the line when Measured parallel to the line of intersection of HP and VP is 50mm. Draw the projections of the line and find its inclination with VP
(JNTU June 2009)

9 A point 'A' is 40mm from both the reference planes. Draw its projections in all possible positions.
b) Two pegs fixed on a wall are 4.5m apart. The distance between the pegs measured parallel to floor is 3.6m. If one peg is 1.5m above the floor; find the height of the second peg and the inclination of the line joining two pegs with the floor **(JNTU June 2009)**

10 A line AB, 75mm long is in the second quadrant with the end A in the H.P. and the end B in the
V.P. The line is inclined at 300 to the H.P. and at 450 to V.P. Draw the projections of AB.

(JNTU June 2009)

11 a) A point A is situated in the first quadrant. Its shortest distance from the intersection point of H.P., V.P, and auxiliary plane is 50mm and it is equidistant from the principal planes. Draw the projections of the point and determine its distance from the principal planes.
b) A Point P is 20mm below. H.P. and lies in the third quadrant. Its shortest distance from xy is
40mm. Draw its projections. **(JNTU June 2009)**

12 Two apples on a tree are respectively 1.5m and 4 m above the ground, and 1.2m and 2m from a
0.3 m thick wall, but on the opposite sides of it. The distance between the apples, measured along the ground and parallel to the wall is 2.7m. Determine the real distance between the apples
(JNTU June 2009)

13 State the quadrants in which the following are situated:
(a) A point A; its top view is 40mm above XY; the front view, 20mm below the top view. (b) A point B, its projections coincide with each other 50mm

below XY.
(c) A point C; its top view 50mm below XY; the front view 30mm above top view. (d) A point D; its top view on XY and front view 40mm below top view.
(e) A point E; its top view 30mm above XY; its front view below top view. **(JNTU June 2009)**

14 The distance between the end projectors of a line PQ is 50mm.A point P is 30mm above H.P. and 25mm behind V.P. while a point Q is 40mm below H.P. and 30mm in front of V.P. draw the projections of line and determine the true length and true inclination of the line with H.P. and V.P.
(JNTU June 2009)

15 a) A point 45mm above XY line is the top view of two points A and B. The front view of A is
50mm above the H.P. while that of the point B is 40mm below the H.P.. Draw the projections of the points and state their position with respect to the principal planes and the quadrant in which they lie.
b) A point A is 45mm above H.P. and lies in the first quadrant. Its shortest distance from XY is
50mm .Draw its projections. **(JNTU June 2009)**

16 The projectors of the ends of a line AB are 60mm apart. The end A is 30mm above the H.P. and 40mm in front of the V.P. The end B is 20mm below the H.P. and 50mm behind the V.P. Determine the true length and its inclinations with two planes using trapezoidal method.
(JNTU June 2009)

17 A line, AB, 75mm long is in second quadrant with the end A in the HP and the end B in the VP.
The line is inclined at 300 to HP and at 450 to VP. Draw the projections of AB and determine its traces.
(JNTU June 2009)

18 a) Two points A & B are in the H.P. The point A is 30mm in front of the V.P., while B is behind the V.P. The distance between their projectors is 75mm and the line joining their top views makes an angle of 450 with XY .Find the distance of the point B from V.P.
b) A point P is 15mm above the H.P and 20mm in front of the V.P. Another point Q is 25mm behind the V.P. and 40mm below the H.P. Draw projections of P and Q keeping the distance between their projectors equal to 100mm.Draw straight lines joining:
i) Their front views
ii) Their top views **(JNTU June 2009)**

19 A vertical line AB 75mm long has its end A in the H.P. and 25mm in front of the V.P. A line AC,
100mm long, is in the H.P. and parallel to the V.P. Draw the projections of the line joining B and
C, and determine its inclination with H.P.

b) Draw the projections of a 100mm long straight line inclined at 600 to the V.P., in the H.P, and its one end in the V.P.
(JNTU June 2009)

20 a) A point 'A' is 10mm above the H.P and 20mm in front of V.P. Another point 'B' is 20mm behind V.P and 30mm below the H.P. Draw the projections of A & B keeping the distance between their Projections as 100mm.Draw straight lines joining their top views and their front views.
b) Two points P & Q are in the H.P. the point 'P' is 30mm in front of the V.P while Q is behind the V.P. The distance between their projections is 75mm and the line joining their top views makes an angle of 300 with XY. Find the distance of the point Q from the V.P.
(JNTU June 2009)

UNIT – III

1. A regular hexagonal plane of 45mm side has corner on HP. and its surface is inclined at 45^0 HP.
Draw the projections, when the diagonal through the corner which is on HP makes 30^0 with VP.
(JNTU June 2010)
2. A regular hexagonal plane of 45mm side, has a corner on H.P, with its surface inclined at 45^0 to
H.P. Draw its projections when
i) the top view of the diagonal through the resting corner makes 30^0 with V.P and
ii) the diagonal itself makes 30^0 with V.P. **(JNTU June 2010)**

3. a] A regular hexagonal plane of 30 mm side, has a corner at 20 mm from VP and 50 mm from HP
its surface is inclined at 45^0 to VP and perpendicular to HP. Draw the projections of plane.
b] A semi circular plate of 80 mm dia, has its straight edge on VP and inclined at 30^0 to HP, while the surface of the plate is inclined at 45^0 to VP. Draw the projections of the plate.
(JNTU June 2010)
4. Draw the projections of a circle of 50 mm diameter resting in the HP on a point A on the circumference, its plane inclined at 45^0 to the HP and the diameter AB making 30^0 angle with the VP.
(JNTU June 2010)
5. Draw the projections of circle of 75 mm diameter having the end A of the diameter AB in the
H.P., the end B in the V.P., and the surface inclined at 30^0 to the H.P. and at 60^0 to the V.P.
(JNTU June 2009)
6. a] Draw the projections of a hexagonal pyramid, base 30 mm side and axis 60 mm long, having
its base inclined at 450 to the V.P.
b] Draw the projections of a pentagonal prism, base 25 mm side and axis 50 mm long, resting on one of its rectangular faces on the ground, with the axis inclined at 45^0 to the VP.
(JNTU June 2009)
7. A cone of base 50mm diameter and axis 80 long, has one of its generators on V.P and

inclined
at 30^0 to H.P. Draw the three views of the cone **(JNTU June 2009)**

8. Draw the projection of a rhombus having diagonals 125mm and 50mm long, the smaller diagonal of which is parallel to both the principal planes, while the other is inclined at 30^0 to the HP.

(JNTU June 2009)

9. a) A pentagonal pyramid of base 25mm side and axis 60mm long, is resting on H.P on a base corner, with an edge of the base containing that corner, making 30o with H.P. Draw the projections of the pyramid. When its axis is perpendicular to VP and the base is at 15mm from V.P.

b) Draw the projections of a hexagonal prism of base 25mm side and axis 60mm long, is resting on one of its corners of the base on H.P. The axis of the solid is inclined at 45^0 to H.P. Follow the change of position method.

(JNTU June 2009)

10. A cylinder of base diameter 60 mm and height 90 mm is situated is such a way that the axis is
45^0 to the VP and the axis making 600 to the ground. Draw the projections of object.

(JNTU June 2009)

11. A regular hexagonal plate of 35mm side has one corner touching V.P and another opposite corner touching H.P. The plate is inclined at 60o to H.P and 30o to V.P. Draw the projections of the plate, neglecting the thickness of it.

(JNTU June 2009)

12. A hexagonal pyramid, base 25mm side and axis 50mm long, has an edge of its base on the ground, its axis is inclined at 300 to the ground and parallel to the VP. Draw it projections.

(JNTU June 2009)

13. Draw three views of a cone, base 50mm diameter and axis 75mm long, having one of its generators in the V.P. and inclined at 30° to the H.P., the apex being in the H.P.

(JNTU June 2009)

14. A composite plate of negligible thickness is made-up of a rectangle 60mm x 40mm, and semi- circle on its longer side. Draw its projections when the longer side is parallel to the H.P. and inclined at 45o to the V.P., the surface of the plate making 30^0 angle with the H.P.

(JNTU June 2009)

15 A square pyramid, base 40mm side and axis 90mm long, has a triangular face on the ground and the vertical plane containing the axis makes an angle of 45^0 with the V.P. Draw its projections.

(JNTU June 2009)

16 Draw the projections of a cone of 100mm height and 75mm diameter, resting on one of its generators on H.P and its axis lies in a vertical plane, inclined at 30^0 to V.P.**(JNTU June 2009)**

17 Draw the projections of a rhombus having diagonals 125mm & 50mm long the smaller diagonal of which is parallel to both the parallel lines, while the other is inclined at 30^0 to H.P.

(JNTU June 2009)

18 A pentagonal prism is resting on one of the corners of its base on the H.P. The longer edge

containing the corner is inclined at 450 to the H.P. The axis of the prism makes an angle of 300 to the V.P. Draw the projections of the solid.
(JNTU June 2009)

19 A 600 set square of 125mm longest side is so kept that the longest side is in the H.P. making an angle of 30^0 with the V.P. and the set square itself inclined at 45^0 to the H.P. Draw the projections of the set square.
(JNTU June 2009)

20 A Tetrahedron of 75mm long edges has one edge parallel to the H.P. and inclined at 45^0 to the
V.P., while a face containing that edge is vertical. Draw its projections. **(JNTU June 2009)**

UNIT - IV

1. A hexagonal pyramid of side of base 25mm and axis 60mm long, is resting on an edge of the base on H.P. Draw the projections of the solid, when the axis makes an angle of 45^0 with VP and the base of the solid is nearer to VP. **(JNTU June 2010)**

2. Draw the projections of a cone, base 45mm diameter and axis 50mm long, when it is resting on the ground on a point in its base circular with the axis making and angle of 30^0 with the H.P and 45^0 with the VP. **(JNTU June 2010)**

3. a) Draw the projections of a square pyramid having one of its triangular faces in the V.P. and the axis parallel to an 40 mm above the H.P. Base 30mm side; axis 75mm long.

b) A tetrahedron of 75mm long edges has one edge parallel to the H.P. and inclined at 45^0 to the
V.P. while a face containing that edge is vertical. Draw its projections. **(JNTU June 2010)**

4. Draw the projection of a cone, base 45mm diameter and axis 50mm long, when it is resting on the ground on a point on its base circle with the axis making an angle of 30^0 with the HP and its top view making 45^0 with the V.P. **(JNTU June 2010)**

5. a] A pentagonal pyramid of base 25mm side and axis 60mm long, is resting on an edge of the base.
Draw the projections of the pyramid. When its axis is perpendicular at to VP and the base is at
15mm from VP.
b] Draw the projections of a pentagonal prism of base 25 mm side and axis 50mm long, is resting in one of its rectangular faces on H.P the axis of the solid is inclined at 45^0 to VP.
(JNTU June 2010)

6. Draw the projections of a cone, base 50mm diameter and axis 75mm long, lying on a generator on the ground with the top view of the axis making an angle of 45^0 with the V.P.
(JNTU June 2010)

7. a) A tetrahedron of 5cm long edges is resting on the ground on one of its faces, with an edge of that face parallel to the V.P. Draw its projections and measure the distance of its apex from the ground. b) Draw the projections of a pentagonal prism, base 25mm side and axis 50mm long, resting on one of its rectangular faces on the ground, with the axis inclined at 45^0 to the V.P.

(JNTU June 2010)

8. Draw three views of a cone, base 50 mm dia and axis 75 mm long, having one of its generators in the VP and inclined at 30^0 to the HP. The open being in the H.P. **(JNTU June 2010)**

9. A hexagonal pyramid of 30mm edge of base and height 65mm rests with a base on HP and an edges of the base parallel to VP. Draw the isometric projection of the pyramid.

(JNTU June 2010)

10. Draw the isometric view of pentagonal pyramid, with side of base 25mm and axis 60mm long. The pyramid is resting on its base on HP, with an edge of the base (away from the observer) parallel to VP. Use offset method. **(JNTU June 2010)**

11. A sphere of diameter 40mm rests centrally on the top smaller end of a frustum of hexagonal pyramid. The frustum of the pyramid has 25mm sides at the top, 40mm sides at the base and is
80mm high. Draw the isometric projection of the combination of the solids. **(JNTU June 2010)**

12. Draw the isometric view of a hexagonal prism, with side of base 25 mm and 60 mm long. The prism is resting on its base on HP, with an edge of the base parallel to VP. Use box method.

(JNTU June 2010)

13. Draw the isometric view of cylinder 50 mm diameters of base and 65mm height resting with its base on H.P.
i) When its axis is vertical and
ii) When its axis is horizontal **(JNTU June 2009)**

14. A combination of the solids is formed as follows: A frustum of cone 25mm top diameter 50mm bottom diameter and 50mm high is placed vertically on a cylindrical block of 75mm diameter and
25mm thick such that both the solids have the common axis. Draw the isometric projection of the combination of the solids.
(JNTU June 2009)

15. a) Draw the isometric view of a cone, base 40 mm diameter and axis 55 mm long. (i) when its axis is vertical and (ii) when its axis is horizontal.
b) Draw the isometric view of a square prism, with slide of base 40 mm and length of axis 70 mm, when its axis is vertical.
(JNTU June 2009)

16. A hexagonal prism of side of base 30mm and 70mm long has a square hole of sides 20mm at the centre. The axes of the square hole and hexagonal prism

coincide, and one of the faces of the square hole is parallel to one of the faces of the hexagon. Draw the isometric projection of the prism with the hole
(JNTU June 2009)

17. A pentagonal prism having the side of base 25mm and the height of 80mm is resting on one of the corner of the base and its axis is inclined to 45^0 to the H.P. Draw its projections and also prepare the isometric view of the prism
(JNTU June 2009)

18. Draw the isometric view of hexagonal prism, side of the base 30mm long and the axis 50mm long, when the axis is:
i) vertical
ii) horizontal. **(JNTU June 2009)**

19. A cylindrical block of base 75mm diameter and 100mm is standing on the H.P. with its axis perpendicular to H.P. Draw its isometric view.
(JNTU June 2009)

20.. The outside dimensions of a box made of 5 cm thick planks are 100cm × 50cm x 50cm height.
The depth of the lid on the outside is 15 cm. Draw the isometric view of the box when the lid is
1200 open. **(JNTU June 2009)**

13. A frustum of a square pyramid of 25mm base edge and height 40mm is placed on top of a sphere of diameter 40mm. Draw the isometric projection of the combination of the solids
(JNTU June 2009)

14. Draw the isometric view of the cylinder, base 40mm diameter and axis 55mm long when i) its axis is horizontal
ii) its axis is vertical **(JNTU June 2009)**

15. The outside dimensions of a box made of 5 cm thick planks are 100cm × 50cm x 50cm height.
The depth of the lid on the outside is 15 cm. Draw the isometric view of the box when the lid is
900 open. **(JNTU June 2009)**

16. A frustum of a cone 25mm top diameter, 50mm bottom diameter and 60mm highis placed in a cylindrical block of 75mm diameter and 50mm height such that,both the solids have the common axis. Draw the isometric projection of the combination of the solid **(JNTU June 2009)**

17. A hexagonal pyramid of 30mm edge of base and height 65mm rests with a base on HP and an edges of the base parallel to VP. Draw the isometric projection of the pyramid
(JNTU June 2009)

18. Draw the isometric view of pentagonal pyramid, with side of base 25mm and axis 60mm long.
The pyramid is resting on its base on HP, with an edge of the base (away from the

observer)
parallel to VP. Use offset method. **(JNTU June 2009)**

19. A sphere of diameter 40mm rests centrally on the top smaller end of a frustum of hexagonal pyramid. The frustum of the pyramid has 25mm sides at the top, 40mm sides at the base and is
80mm high. Draw the isometric projection of the combination of the solids. **(JNTU June 2009)**

20. Draw the isometric view of a hexagonal prism, with side of base 25 mm and 60 mm long. The prism is resting on its base on HP, with an edge of the base parallel to VP. Use box method.

(JNTU June 2009)

UNIT – V

1. Draw the isometric view of given object. Shown figure below (all dimensions are in mm)

(JNTU June 2010)

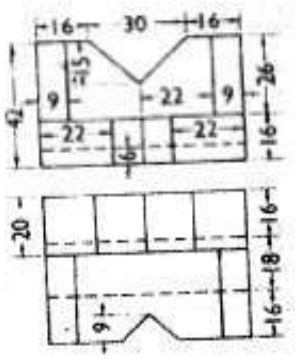

2. Draw an isometric view of a given object. Shown figure below (all dimensions are in mm)

(JNTU June 2010)

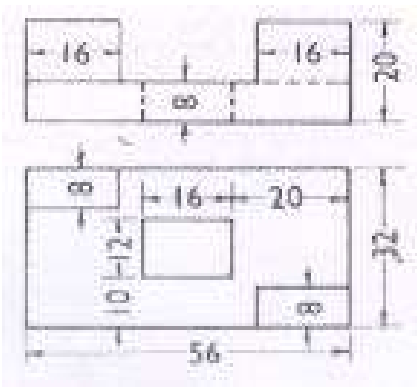

3. Draw the orthographic views of an object Shown figure below (all dimensions are in mm)

a] Front
view b]
Top
view
c] Right Side view. **(JNTU June 2010)**

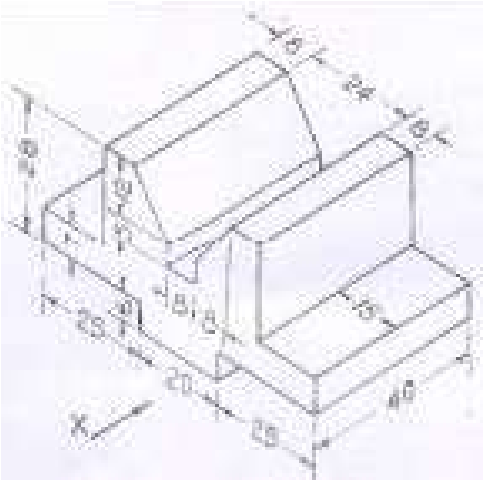

4. Draw an isometric view of given figure below. (all dimensions are in mm). **(JNTU June 2010)**

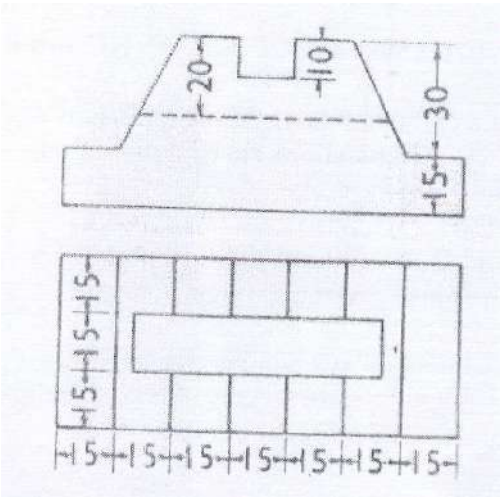

5. Draw the orthographic views of an object Shown figure below (all dimensions are In mm)
a] Front
view b]
Top
view
c] Left Side view **(JNTU June 2009)**

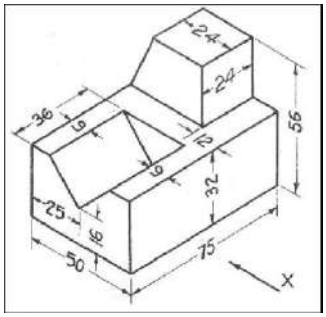

6. Draw the orthographic views of an object Shown figure below (all dimensions are in mm)

a] Front view b] Top view

c] Left Side view. **(JNTU June 2009)**

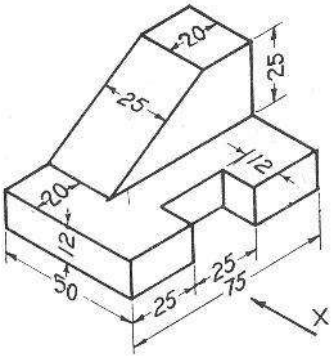

7. Draw the orthographic views of an object Shown figure below (all dimensions are in mm)

a] Front view b] Top view

c] Left Side view **(JNTU June 2009)**

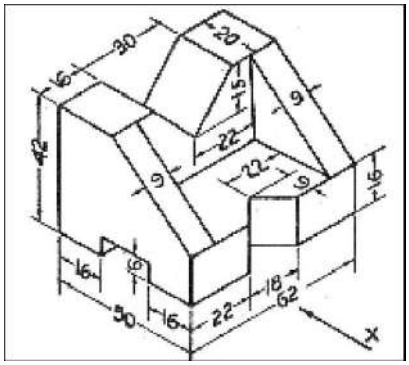

8. Draw the following views of the object shown pictorially shown in figure below: (all dimensions in the figure are in mm)

a) Front view b) Top

view
c) Both Side views **(JNTU June 2009)**

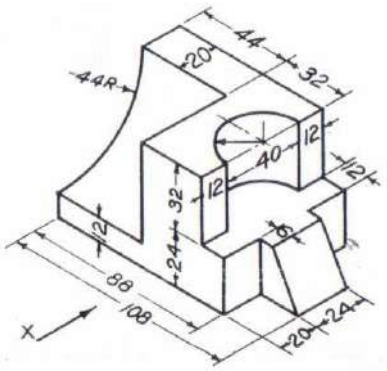

9. Draw the following views of the object shown pictorially shown in figure below: (all dimensions in the figure are in mm).
a) Front
view b)
Top
view
c) Both Side views **(JNTU June 2009)**

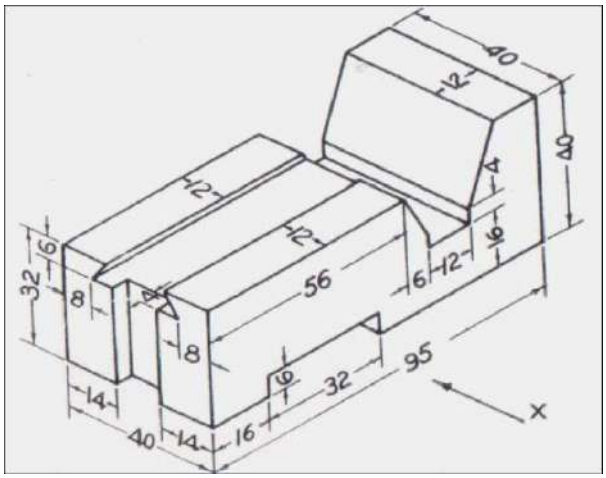

10 Draw the following views of the object shown pictorially shown in figure below: (all dimensions in the figure are in mm).
a) Front
view b)
Top
view
c) Both Side views **(JNTU June 2009)**

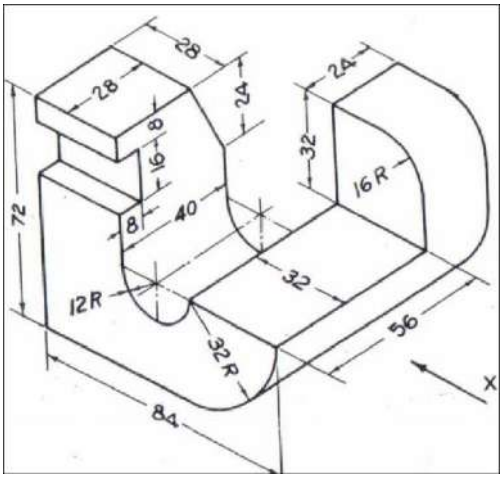

11 Draw the following views of the object shown pictorially shown in figure below: (all dimensions in the figure are in mm).
a) Front view b) Top view
c) Both Side views **(JNTU June 2009)**

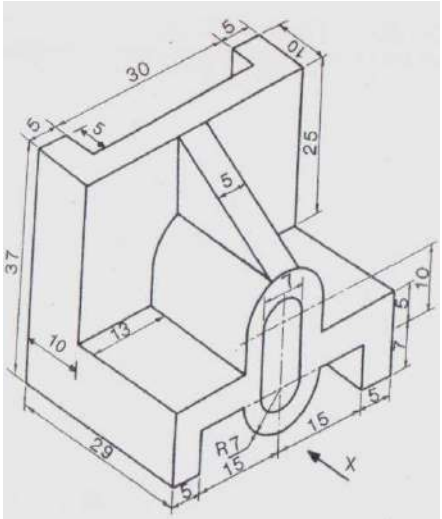

12 Draw the front view, top view and left side view of the following object shown in figure below. (All dimensions in the figure are in mm).
(JNTU June 2009)

13 Draw the following views of the object shown pictorially shown in figure below. (all dimensions in the figure are in mm).
a) Front view b) Top view
c) Both Side views. **(JNTU June 2009)**

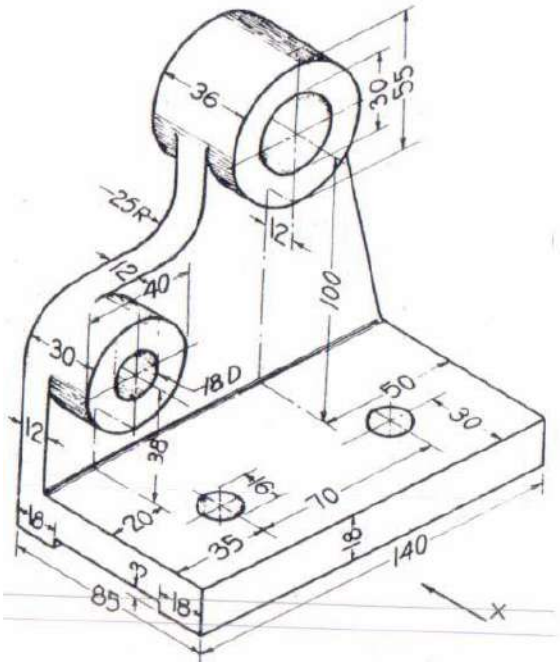

14 Draw the following views of the object shown pictorially shown in figure below: (all dimensions in the figure are in mm).

a) Front view b) Top view

c) Both Side views **(JNTU June 2009)**

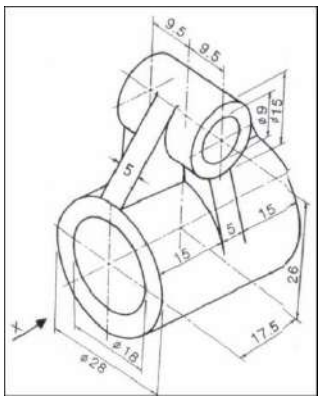

15 Draw the orthographic views of an object Shown figure below (all dimensions are in mm)

a] Front view b] Top view

c] Right Side view. **(JNTU June 2009)**

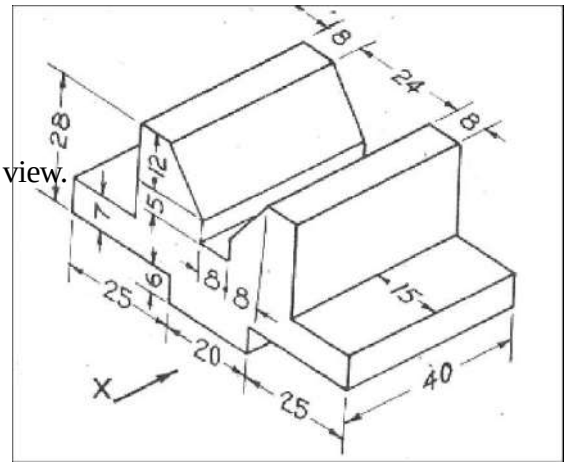

16. Draw the front view, top view, right and left side views of the object shown in figure 8 (All dimensions in mm).
(JNTU May/June 2008)

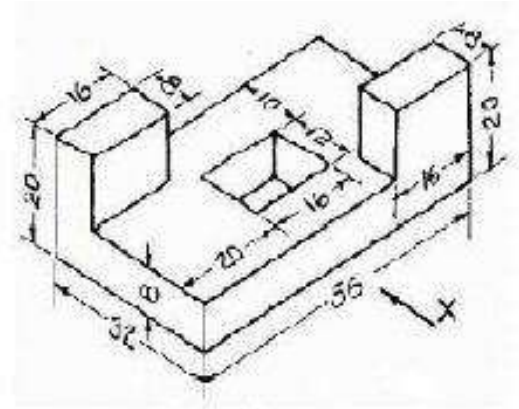

Figure 8

17. Draw the orthographic views of the object as shown in the figure 8. (all dimensions are in mm). (a) Front View (b) Top View (c) Side View.
(JNTU May/June 2008)

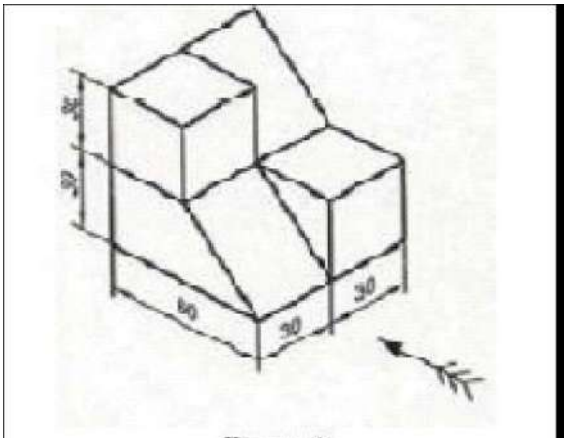

Figure 8

18. Draw the following views of the block shown in figure 8. All dimensions are in mm. (a) Front View.
(b) Top view
(c) Both side views. **(JNTU May/June 2008)**

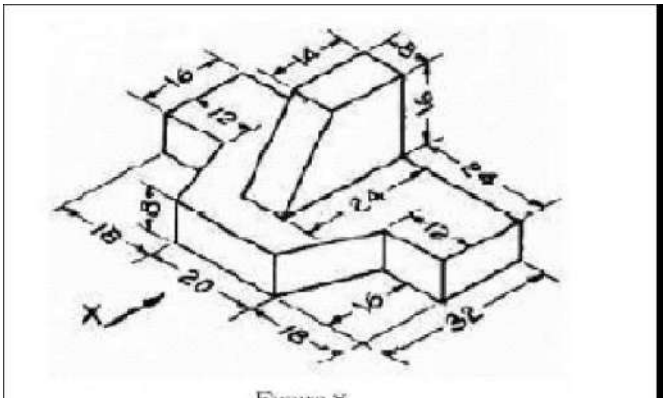

Figure 8

19. Draw the orthographic projections for the given isometric view figure 8. All dimensions are in mm.
(JNTU May/June 2008)

20. Draw the elevation, plan and left and right views of the part shown in the figure 8(dimensions in mm).
(JNTU May/June 2008)

\

A hexagonal pyramid of base side 30 mm and axis 60 mm rests on edge of the base on the HP with the triangular face containing that edge perpendicular to the HP and parallel to the VP. Draw its projections so that the base is visible.

QUESTION AND ANSWERS

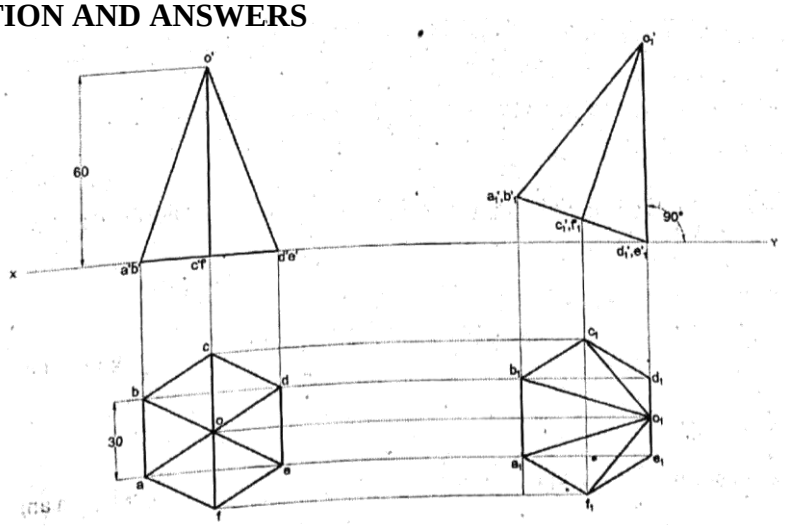

A cylinder, having a base with a 50 mm diameter and a 65 mm long axis, is resting on one of its generators in the HP. Draw its projections when its axis is inclined at 30° to the V.P.

One of the body diagonals of a cube is 65 mm long and inclined at 45 degrees to the H.P and inclined at 30° to the V.P. Draw its projections so that its axis is inclined at 30° to the V.P. Draw the front view and top view of the cube.

A pentagonal prism of base 30 mm side and axis 70 mm long has its axis inclined at 30° to VP. An edge of its base is in VP and inclined at 45° to the HP. Draw its projections.

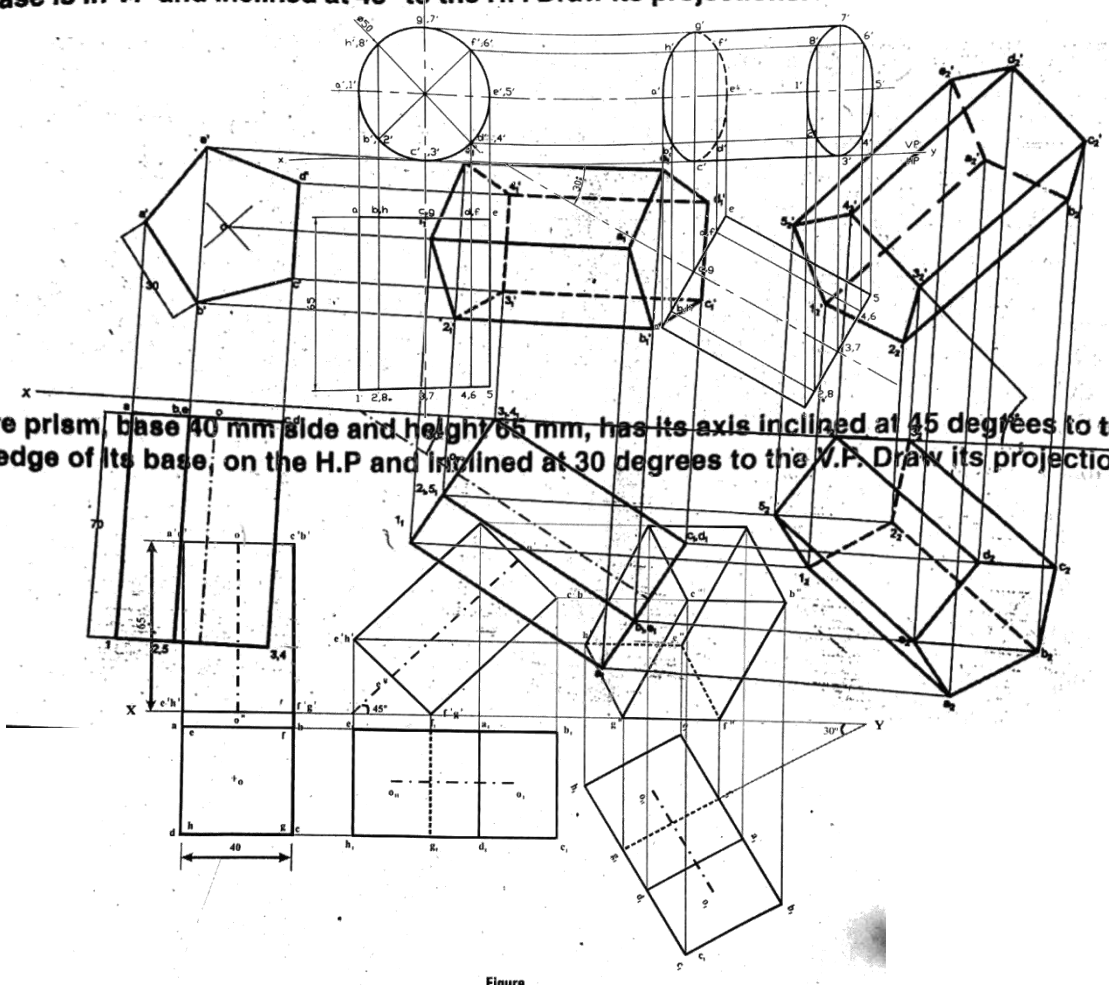

A square prism, base 40 mm side and height 65 mm, has its axis inclined at 45 degrees to the H.P and has an edge of its base, on the H.P and inclined at 30 degrees to the V.P. Draw its projections.

Figure

A pentagonal prism of base side 30 mm and axis length 60 mm is resting on H.P on one of its rectangular faces with its axis perpendicular to V.P. It is cut by a plane inclined at 50° to H.P and perpendicular to V.P and is 15 mm away from axis. Draw it's front view, sectional top view and true shape of section.

wer :

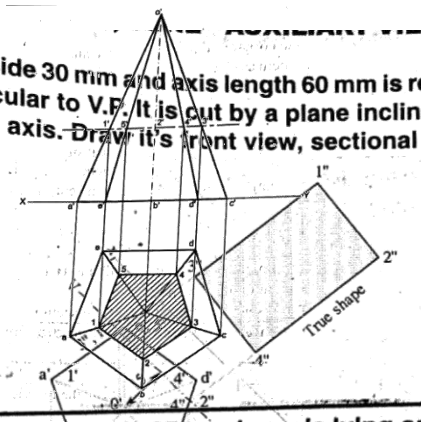

A cone, diameter of base 50 mm and axis 65 mm long, is lying on the H.P on one of its generators with the axis parallel to the V.P. It is cut by a horizontal section plane 12 mm above the ground. Draw its front view and sectional top view.

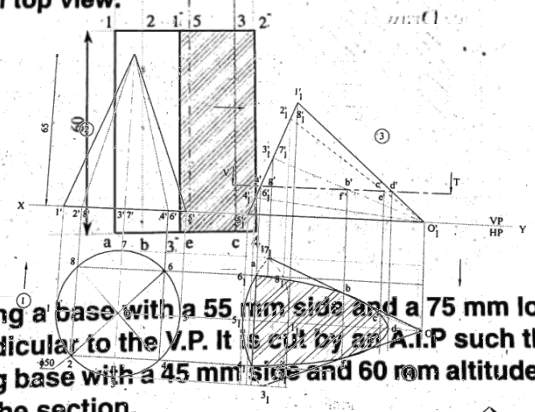

A triangular prism, having a base with a 55 mm side and a 75 mm long axis, is lying on the H.P with a side of the base perpendicular to the V.P. It is cut by an A.I.P such that true shape of the section is an isosceles triangle having base with a 45 mm side and 60 mm altitude. Draw its front view, sectional top view and true shape of the section.

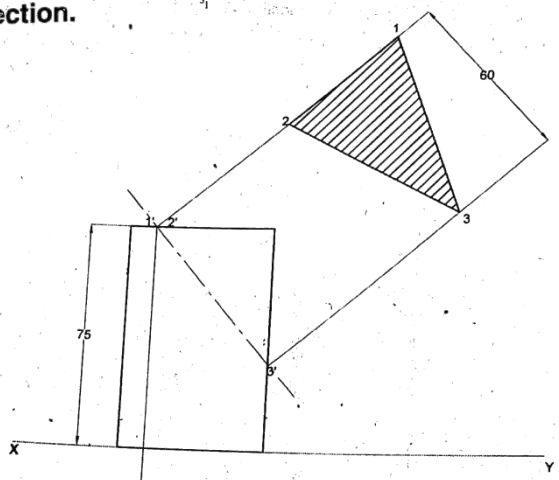

Figure

A solid right circular cone of base diameter 50 mm and axis 50 mm long is freely suspended from a point on the periphery of base. Draw its projection when the axis is parallel to V.P.

wer :

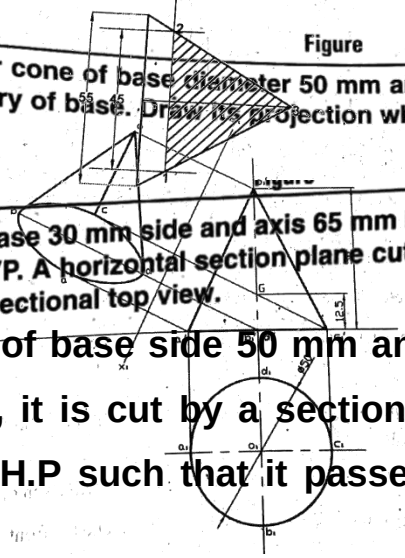

A pentagonal pyramid, base 30 mm side and axis 65 mm long, has its base horizontal and an edge of the base parallel to the VP. A horizontal section plane cuts it at a distance of 25 mm above the base. Draw its front view and sectional top view.

A square prism of base side 50 mm and height of axis 80 mm has its base on H.P, it is cut by a section plane perpendicular to V.P and inclined to H.P such that it passes through the two opposite

corners of the rectangular face in front. Draw the sectional Top View and Front View and true shape of the section

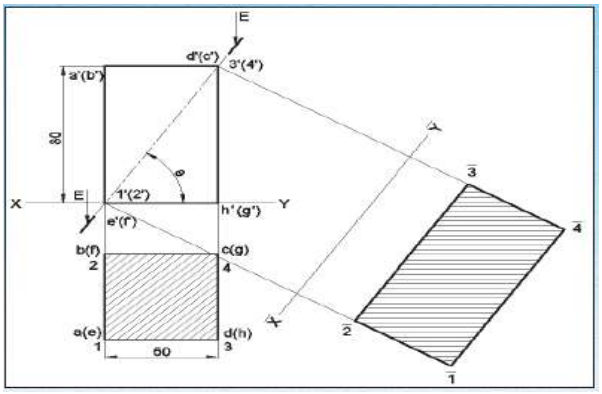

A square pyramid, 40 base sides and axis 60 mm long, has a triangular face on the ground and the vertical plane containing the axis makes an angle of 45^0 with the VP. Draw its projections. Take apex nearer to VP.

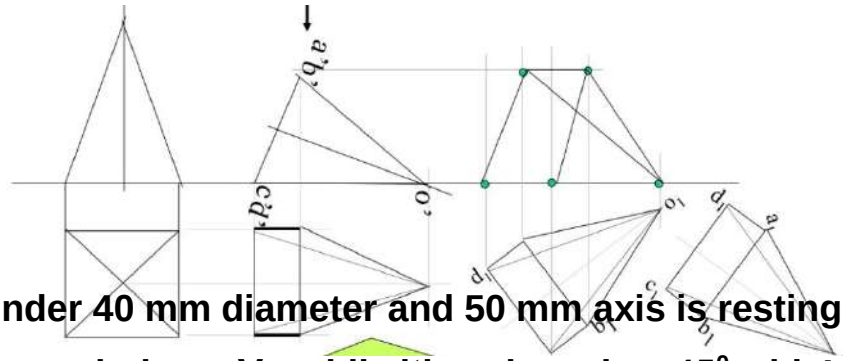

A cylinder 40 mm diameter and 50 mm axis is resting on one point of a base circle on Vp while it's axis makes 45^0 with Vp and Fv of the axis 35^0 with Hp. Draw projections.

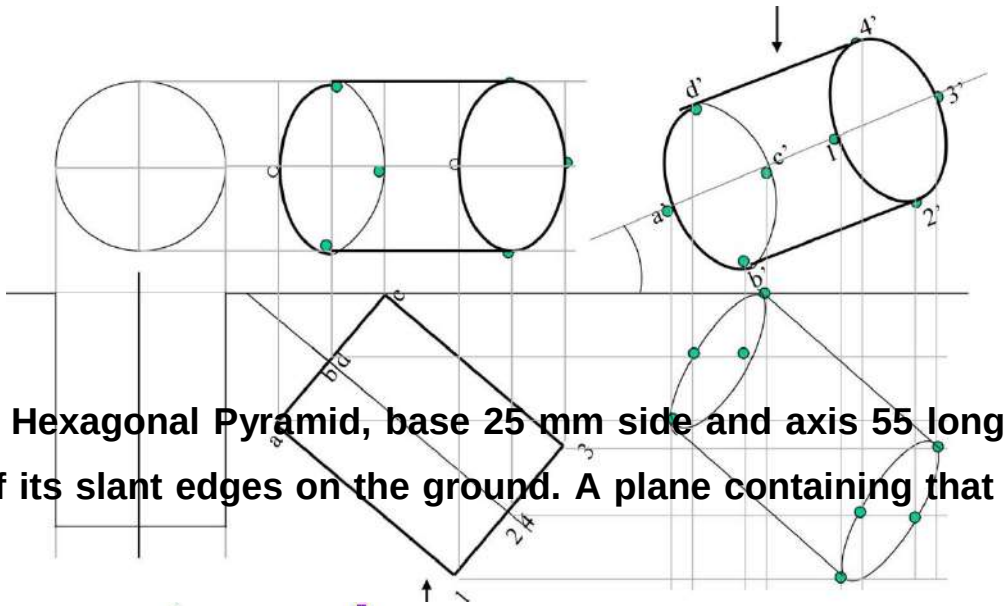

A Hexagonal Pyramid, base 25 mm side and axis 55 long, has one of its slant edges on the ground. A plane containing that edge and

the axis is perpendicular to the HP and inclined at 45^0 to VP. Draw the projections when the apex is nearer to the VP than the base.

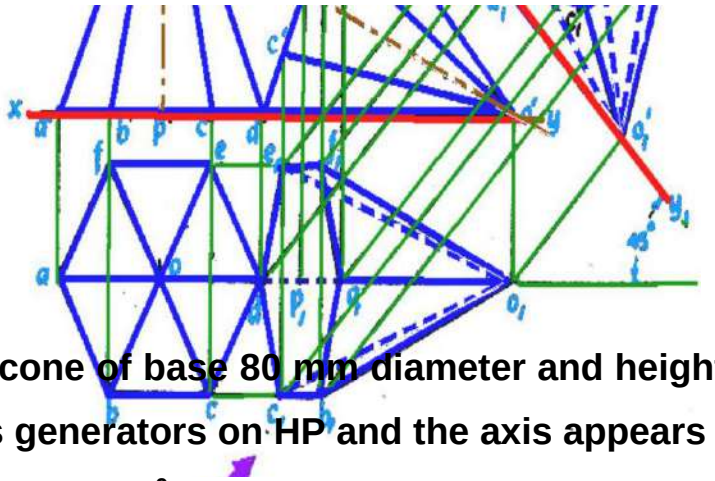

A cone of base 80 mm diameter and height 100 mm lies with one of its generators on HP and the axis appears to be inclined to VP at an angle of 40^0 in the top view. Draw its top and front views.

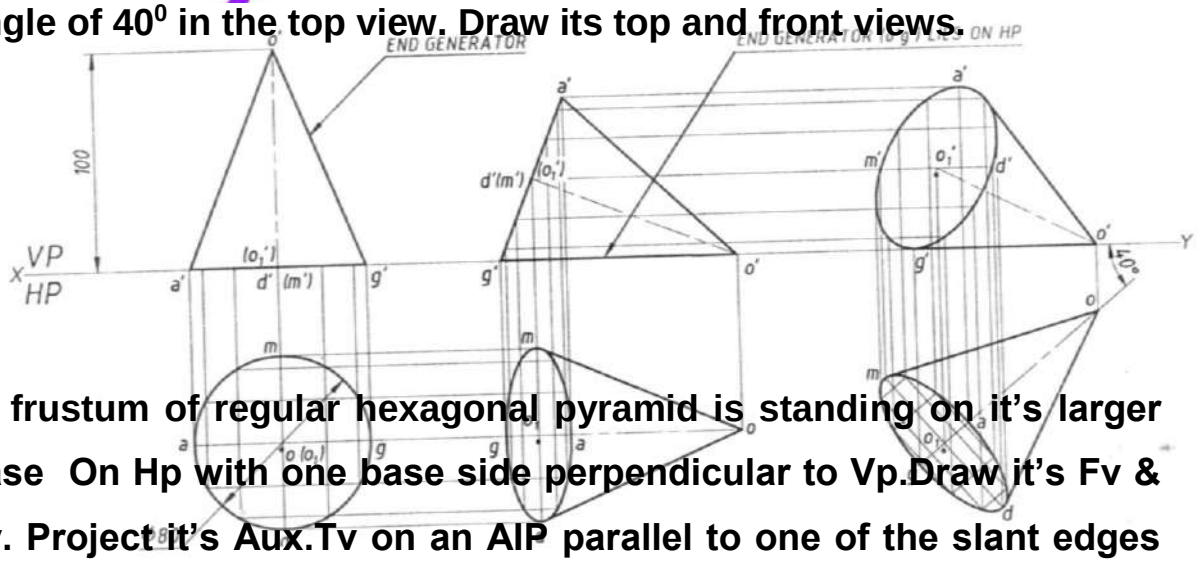

A frustum of regular hexagonal pyramid is standing on it's larger base On Hp with one base side perpendicular to Vp.Draw it's Fv & Tv. Project it's Aux.Tv on an AIP parallel to one of the slant edges showing TL. Base side is 50 mm long , top side is 30 mm long and 50 mm is height of frustum.

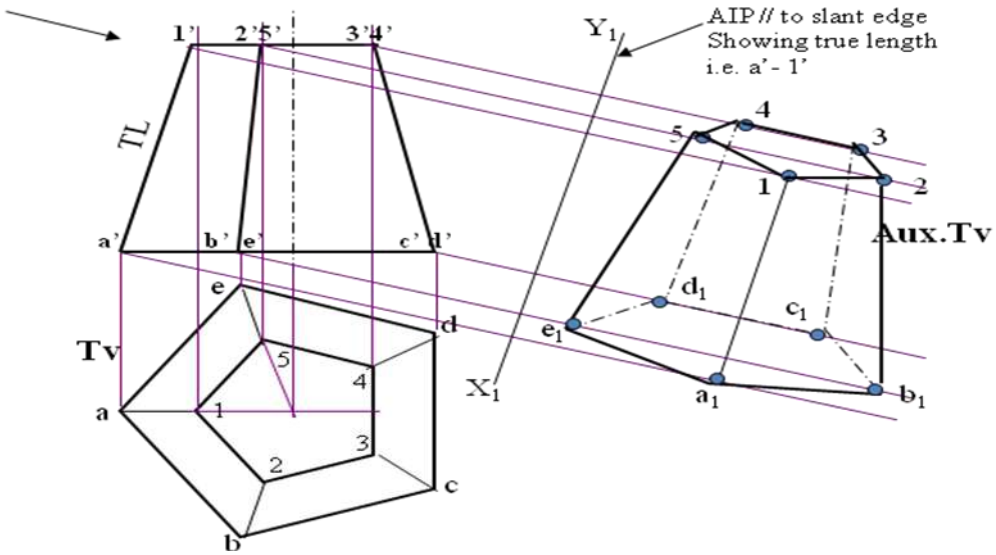

A pentagonal prism , 30 mm base side & 50 mm axis is standing on Hp on it's base whose one side is perpendicular to Vp. It is cut by a section plane 45^0 inclined to Hp, through mid point of axis. Draw Fv, sec.Tv & sec. Side view. Also draw true shape of section.

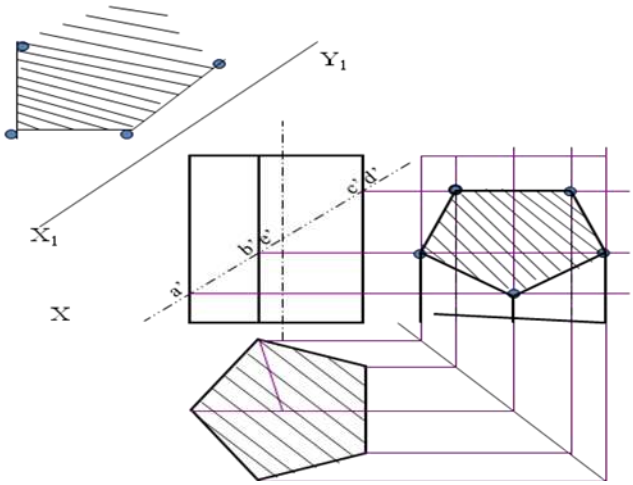

A cone, 50 mm base diameter and 70 mm axis is standing on it's base on Hp. It cut by a section plane 45^0 inclined to Hp through base end of end generator.Draw projections, sectional views, true shape of section.

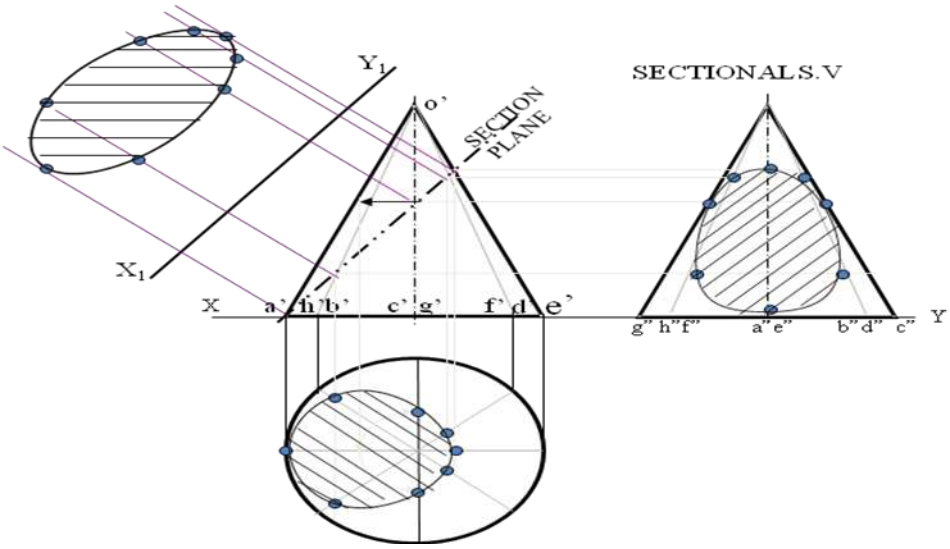

A cone 40mm diameter and 50 mm axis is resting on one generator on Hp(lying on Hp) which is // to Vp.. Draw it's projections.It is cut by a horizontal section plane through it's base center. Draw sectional TV.

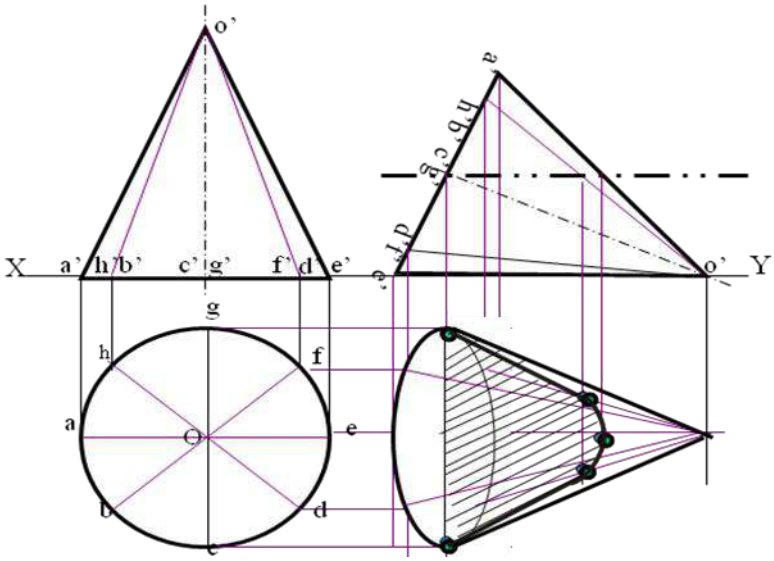

A hexagonal prism. 30 mm base side & 55 mm axis is lying on Hp on it's rect.face with axis // to Vp. It is cut by a section plane normal to Hp and inclined to Vp bisecting axis. Draw sec. Views, true shape.

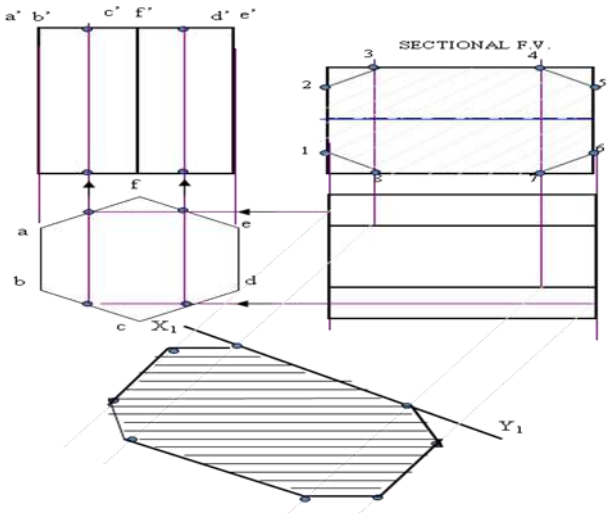

Dr. E D FRANCIS

HOLY MARY INSTITUTE OF TECHNOLOGY & SCIENCE

Bogaram (V), Keesara (M), Medchal Dist. – 501 301

Approved by AICTE, New Delhi and Permanently Affiliated to JNTU Hyderabad

Accredited by NAAC-"A" Grade

DEPARTMENT OF SCIENCE & HUMANITIES

HAND BOOK FOR APPLIED PHYSICS.SYLLABUS

B.Tech. I Year Syllabus JNTU HYDERABAD

JAWAHARLAL NEHRU TECHNOLOGICAL UNIVERSITY HYDERABAD

B.Tech. 1st Year Syllabus (w.e.f AY 2018- 19)

Common for ECE & EIE.

I YEAR I SEMESTER

S. No.	Course Code	Course Title	L	T	P	Credits
1	MA101BS	Mathematics – I	3	1	0	4
2	AP102BS	Applied Physics	3	1	0	4
3	CS103ES	Programming for Problem Solving	3	1	0	4
4	ME104ES	Engineering Graphics	1	0	4	3
5	AP105BS	Applied Physics Lab	0	0	3	1.5
6	CS106ES	Programming for Problem Solving Lab	0	0	3	1.5
7	*MC109ES	Environmental Science	3	0	0	0
		Induction Programme				
		Total Credits	13	3	10	18

I YEAR II SEMESTER

.

S. No.	Course Code	Course Title	L	T	P	Credits
1	MA201BS	Mathematics - II	3	1	0	4
2	CH202BS	Chemistry	3	1	0	4
3	ME203ES	Basic Electrical Engineering	3	0	0	4
4	ME205ES	Engineering Workshop	1	0	3	2.5
5	EN205HS	English	2	0	0	2
6	CH206BS	Engineering Chemistry Lab	0	0	3	1.5
7	EN207HS	English Language and Communication Skills Lab	0	0	2	1
8	EE208ES	Basic Electrical Engineering Lab	0	0	2	
		Total Credits	12	2	10	19.0

*MC – Satisfied/Unsatisfied

PH102BS: APPLIED PHYSICS

Course Objectives:

- Students will demonstrate skills in scientific inquiry,problem solving and laboratory techniques..
- Students will be able to demonstrate competency and understanding of the concepts found in Quantum Mechanics, Lasers and Fiber Optics,Semiconducter physics and Electromagnetic theory and a broad base of knowledge in physics.
- The graduates will be able to solve non-traditional problems that potentially draw on knowledge in multiple areas of physics.
- To study applications in engineering like memory devices, transformer core and electromagnetic machinery.

Course outcomes: Upon graduation:

- The student will be able to learn the fundamental concepts on Quantum behavior of matter in its micro state.
- The knowledge of fundamentals of Semiconductor physics, Optoelectronics, Lasers and fiber optics enable the students to apply to various systems like communications, solar cell, photo cells and so on.
- Design, characterization and study of properties of material help the students to prepare new materials for various engineering applications.
- The course also helps the students to be exposed to the phenomena of electromagnetism and also to have exposure on magnetic materials and dielectric materials.

UNIT-I: Quantum mechanics

Introduction to quantum physics, Black body radiation, Planck's law, Photoelectric effect, Compton effect, de-Broglie's hypothesis, Wave-particle duality, Davisson and Germer experiment, Heisenberg's Uncertainty principle, Born's interpretation of the wave function, Schrodinger's time independent wave equation, Particle in one dimensional box.

UNIT-II: Semiconductor Physics

Intrinsic and Extrinsic semiconductors, Dependence of Fermi level on carrier-concentration and temperature, Carrier generation and recombination, Carrier transport: diffusion and drift, Hall effect, p-n junction diode, Zener diode and their V-I Characteristics, Bipolar Junction Transistor (BJT): Construction, Principle of operation.

UNIT-III: Optoelectronics

Radiative and non-radiative recombination mechanisms in semiconductors, LED and semiconductor lasers: Device structure, Materials, Characteristics and figures of merit, Semiconductor photodetectors: Solar cell, PIN and Avalanche and their structure, Materials, working principle and Characteristics.

UNIT-IV: Lasers and Fiber Optics

Lasers: Introduction to interaction of radiation with matter, Coherence, Principle and working of Laser, Population inversion, Pumping, Types of Lasers: Ruby laser, Carbon dioxide (CO2) laser, He-Ne laser, Applications of laser. Fibre Optics: Introduction, Optical fibre as a dielectric wave guide, Total internal reflection, Acceptance angle, Acceptance cone and Numerical aperture, Step and Graded index fibres, Losses associated with optical fibres, Applications of optical fibres.

UNIT V : Electromagnetism and magnetic properties of Materials

Laws of electrostatics, Electric current and the continuity equation, Ampere's and Faraday's laws, Maxwell's equations, Polarisation, Permittivity and Dielectric constant, Internal fields in a solid, Clausius-Mossotti equation, Ferroelectrics and Piezoelectrics. Magnetisation, permeability and susceptibility, Classification of magnetic materials, Ferromagnetism and ferromagnetic domains, Hysteresis, Applications of magnetic materials

TEXT BOOKS:

1. Engineering Physics, B.K. Pandey, S. Chaturvedi - Cengage Learing.

2. Halliday and Resnick, Physics - Wiley.

3. A textbook of Engineering Physics, Dr. M. N. Avadhanulu, Dr. P.G. Kshirsagar - S. Chand

REFERENCES:

1. Richard Robinett, Quantum Mechanics

2. J. Singh, Semiconductor Optoelectronics: Physics and Technology, Mc Graw-Hill inc. (1995).

3 Online Course: "Optoelectronic Materials and Devices" by Monica Katiyar and Deepak Guptha on NPTEL

.

UNITWISE PLANNER

Sub: **(**AP102BS) Applied Physics A:Y: 2018-2019

	DETAILS	HOURS
I	**Quantum Mechanics*:*** Introduction to quantum physics, Black body radiation, Planck's law, Photoelectric effect, Compton effect, de-Broglie's hypothesis, Wave-particle duality, Davisson and Germer experiment, Heisenberg's Uncertainty principle, Born's interpretation of the wave function, Schrodinger's time independent wave equation, Particle in one dimensional box.	07
II	**Semiconductor physics*:*** Intrinsic and Extrinsic semiconductors, Dependence of Fermi level on carrier-concentration and temperature, Carrier generation and recombination, Carrier transport: diffusion and drift, Hall effect, p-n junction diode, Zener diode and their V-I Characteristics, Bipolar Junction Transistor (BJT): Construction, Principle of operation	12
III	**Optoelectronics*:*** Radiative and non-radiative recombination mechanisms in semiconductors, LED and semiconductor lasers: Device structure, Materials, Characteristics and figures of merit, Semiconductor photodetectors: Solar cell, PIN and Avalanche and their structure, Materials, working principle and Characteristics.	06
IV	**Lasers and Fiber opticsLasers**: Introduction to interaction of radiation with matter, Coherence, Principle and working of Laser, Population inversion, Pumping, Types of Lasers: Ruby laser, Carbon dioxide (CO2) laser, He-Ne laser, Applications of laser. Fibre Optics: Introduction, Optical fibre as a dielectric wave guide, Total internal reflection, Acceptance angle, Acceptance cone and Numerical aperture, Step and Graded index fibres, Losses associated with optical fibres, Applications of optical fibres.	13
V	**Electromagnetism and Magbetic properties of Materials*:*** Laws of electrostatics, Electric current and the continuity equation, Ampere's and Faraday's laws, Maxwell's equations, Polarisation, Permittivity and Dielectric constant, Internal fields in a solid, Clausius-Mossotti equation, Ferroelectrics and Piezoelectrics. Magnetisation, permeability and susceptibility, Classification of magnetic materials, Ferromagnetism and ferromagnetic domains, Hysteresis, Applications of magnetic materials .	14
	TOTAL HOURS	52

SESSION PLANNER

S.no	Unit no	Topic	Week	No of sessions planned	Mode of teaching BB/PPT/OHP/MM	Reference *	Remarks
1	I	Introduction to quantum physics,Black body radiation,planks law	4/8	1			
2		Photo electric effect,Compton effect	4/8	1	BB	A3,A6,w1	
3		De Broglie hypothesis,Wave particle duality,Davission & Germer Expt.	4/8	1	BB	A3,A6,w1	
4		Heiseberg's Uncertainty principle,Born interpretation of the wave function	4/8	1	BB	A3,A6,w1	
5		Schrodinger time independent wave equation Particle in a one dimensional box	5/8	1	BB	A3,A6,w1	
6		Solving problems	5/8	1	BB	A3,A6,w1	
7		**Previous question papers discussion**	1/9	1	BB	A3,A6,w1	
8	II	Intrinsic Semiconductor	1/9	1	BB/PPT	A3,A6,w1	
9		Form invariance of Newton's second law,	1/9	1	BB/PPT	A3,A6,w1	
10		Extrinsic semiconductors	2/9	1	BB	A3,A6,w1	
11		Dependence of Fermi level on carrier – concentration,temperature	2/9	1	BB	A3,A6,w1	
12		Carrier generation and recombination	2/9	1	BB	A3,A6,w1	
13		Carrier transport Diffusion and drift		1	BB	A3,A6,w1	
14		Hall effect	3/9				
15		P-N Junction diod	2/9	1	BB	A3, A2,A4,W1	
16		Zener diode and their V-I	3/9	1	BB	A3A2,A4,	

		characteristics					
17		BJT,Construction,Principle of operation	3/9	1	BB	A3, A2,A4,W1	
18		Problems on PNJ,ZD,BJT	4/9	1	BB	A3, A2,A4,W1	
19		**Previous question paper Discussion**	4/9	1	BB	W1	
20	III	Radiative and Non radiative transitions Recombination mechanism	4/9	1	BB	A5,W1	
21		LED	5/9	1	BB/PPT	A5,W1	
22		Semiconductor Laser,structure, materials,characteristics and figures of merits	5/9	1	BB/PPT	A5,W1	
23		Photo detector	5/9	1	BB/PPT	A5,W1	
24		Solar cell		1	BB/learning by doing	A5,W1	
25		PIN diode Structure,material,Working Principle	1/10	1		A5,W1	
26	IV	LASER Interaction of radiation with matter	1/10	1	BB	A1,A4,W1	
27		Coherence Principle & Working of LASER,PI	1/10	1	BB	A1,A4,W1	
28		Pumping,Types of Lasers,Ruby laser,	2/10	1	BB	A1,A4,W1	
29		CO2 Laser,He-Ne Laser	2/10	1	BB	A1,A4,W1	
30		Applications of Lasers	2/10	1	BB	A1,A4,W1	
31		Fiber Optics :Introduction Fiber optic as a Wave guide	3/10	1	BB	A1,A4,W1	
32		T.I.R	3/10	1	BB	A1,A4,W1	
33		Acceptance angle,Acceptance Cone and Numerical aperture	3/10	1	BB	A1,A4,W1	

34		Step Index And Graded Index fiber	4/10	1	BB	A1,A4,W1	
35		Losses in optical fibers	4/10	1	BB	A1,A4,W1	
36		Applications OFC	4/10	1		A1	
37		Numerical solving	5/10	1	BB	A1	
38		Discussion of previous papers	1/11	1	BB/PPT	W2	
39	V	Laws of electrostatics	1/11	1	BB/PPT	A3,W1	
40		Electric current & the continuity Equation	1/11	1	BB/PPT	A3,W1	
41		Amperes Law	1/11	1	BB/PPT	A3,W1	
42		Faradays laws	1/11	1	BB/PPT	A3,W1	
43		Maxwell's equation	2/11	1	BB/PPT	A3,W1	
44		Dielectrics,Polarization,Dielectric constant	2/11	1	BB/PPT	A3,W1	
45		Internal fields	2/11	1	BB/PPT	A3,W1	
46		Clausius -Mossotti relation	2/11	1	BB/PPT	A3,W1	
47		Ferro-electrics	3/11	1	BB/PPT	A3,W1	
48		Piezo-Electricity	3/11	1	BB	A3,W1	
49		Magnetic materials,Magnetization, Permeability,& Susceptibility	3/11	1			
50		Classification of,Magnetic Materials	3/11	1	BB/PPT	A3,A5,W1	
51		Ferromagnetism-,Domains	4/11	1	BB/PPT	A3,A5,W1	
52		Hysteresis applications	4/11	1	BB/PPT	A3,A5,W1	

*

Text Books

A1: Engineering Physics, B.K. Pandey, S. Chaturvedi - Cengage Learing

A2: Halliday and Resnick, Physics - Wiley

.

A3: A textbook of Engineering Physics, Dr. M. N. Avadhanulu, Dr. P.G. Kshirsagar - S. Chand

Reference Books

A4: Richard Robinett, Quantum Mechanics
A5: J. Singh, Semiconductor Optoelectronics: Physics and Technology, Mc Graw-Hill inc. (1995).
A6: Online Course: "Optoelectronic Materials and Devices" by Monica Katiyar and Deepak Guptha on NPTEL

Web Reference

w1: http://nptel.ac.in/courses/Webcourse-contents/IIT-%20Guwahati/engg_physics

X. QUESTION BANK: (JNTUH)

Definitions of the different levels of cognitive skills in Bloom's taxonomy marked in descriptive questions (where the highest level in question bits is only marked) are as follows:

BLOOMS LEVEL	COGNITIVE SKILL	DEFINITION
Level–1 (L1) :REMEMBER	Knowledge	Recalling/Retrieving relevant terminology, specific facts, or different procedures related to information and/or course topics. (At this level, student remembers something, but may not really understand it fully.)
Level–2 (L2) :UNDERSTAND	Comprehension	Determining the meaning of instructional messages (facts, definitions, concepts, graphics etc.)
Level–3 (L3) : APPLY	Application	Carrying out or use previously learned information in another familiar situations or in problem solving
Level–4 (L4) :ANALYZE	Analysis	Breaking information into its constituent parts and detecting how the parts relate to one another and to an overall structure or purpose. Analysis refers to the process of examining information in order to make conclusions regarding cause and effect, interpreting motives, making inferences, or finding evidence to support statements/arguments
Level–5 (L5) :EVALUATE	Evaluation	Making judgment's based on criteria and standards, personal values or opinions
Level–6 (L6) : CREATE	Synthesis	Create or uniquely apply prior knowledge and/or skills to form a novel, coherent whole or original product or produce new and original thoughts, ideas, processes,...

Question Bank for Engineering Physics

DESCRIPTIVE QUESTIONS: (WITH BLOOMS PHRASES)

UNIT WISE IMPORTANT QUESTIONS

SUBJECT: APPLIED PHYSICS

UNIT I

Long answer questions

1. Explain De Broglie hypothesis and derive an expression for wavelength.
2. Explain Davission and Germer experiment for the evidence of matter waves.
3.Define planks law.
4. Explain about black body radiation
5. Derive Schrödinger time independent wave equation.
Derive energy Eigen values for a particle in a one dimensional box.
6. Explain the significance of wave function.
7. Explain the properties of matter waves.

Short answers

1) State and explain about de Broglie's hypothesis.
2) What are matter waves
3) Define photoelectric effect
4) How planks law leads to Raleigh jeans law
5) What is Compton effect
6) Uncertainty Principle
7) Born interpretation

UNIT II

Long answer questions

1. Derive an expression for carrier concentration of electrons in conduction band in an intrinsic semiconductor.
2. Derive an expression for carrier concentration of electrons in conduction band in a n-type semiconductor.
3. What is law of mass action? Explain.
4. What is the effect of temperature on Fermi level?
5. Write a note on carrier generation and recombination.
6. Explain drift and diffusion. Derive an expression for them.
7. What is Hall effect? Derive an expression for hall coefficient.

Short answers

1) Intrinsic semiconductor
2) Extrinsic semiconductor
3) Define Fermi level
4) Define drift

5) Define diffusion
6) Define Hall effect
7) LED

UNIT III

Long answer questions

1. Explain the construction and working of LED.
2. Explain the structure of semiconductor laser with its characteristics.
3. What are photo detectors? How they are operated explain with neat figure.
4. Derive an expression for the efficiency of a Solar cell.
5. Write a note on P.I.N diode.
6.Explain the construction and working of Avalanche diode.
7. Compare and contrast Zener diode with avalanche diode.

Short answers

1) Radiative transition
2) Non-radiative transition
3) Define recombination
4) What is the principle of LED
5) Explain Photo detector
6) What do you mean by Avalanche diode
7) Explain about solar cell

UNIT IV

Long answer questions

1. Define the terms Population inversion, pumping, and Meta stable state.
2. Explain the construction and working of ruby laser with ELD.
3. Explain with a neat diagram, construction and working of He-Ne Laser.
4. Explain the principle of a fiber.
5. Derive an expression of acceptance angle and define Numerical aperture.
6. Differentiate step index fiber with graded index fiber.
7. Explain optical fiber communication with advantages and limitations.

Short Answer Questions

1. What are stimulated and spontaneous emissions?
2. Explain the characteristics of LASER light.
3. What is population inversion?
4. Mention the methods of pumping.
5. Mention a few applications of Lasers.
6. Describe an Optical fiber.

7. Define Total internal reflection.
8. What is acceptance angle?
9. Define Numerical aperture.

UNIT V

1. Derive continuity equation.
2. Expalin amperes law.
3. Define polarization,deielctric caonstant and permittivity.
4. Derive an expression for internal fields.
5. Explain Ferro-electricity with help of BaTio3.Also define piezo-electricity
6. Classify the magnetic materials.
7. Explain hysteresis with help of domain theory of ferromagnetism.

Short answers

1) Define magnetic permeability, susceptibility, magnetic field induction.
2) Write short notes on population inversion.
3) Define Piezo-electricity.
4) What is space charge polarization?
5) Define Electric Susceptibility.
6) Distinguish between Soft and Hard Magnetic Materials.

Objective Questions

UNIT 1

1.The energy of a photon in Joules that has a wavelength of 9.0 m is:

a)6.0×10^{-23}

b)4.5×10^{25}

c)4.5×10^{-25}

d)2.2×10^{-26}

2. The ratio of the energy of a photon of 2000 Çº wavelength radiation to that of 4000 Çº radiation is:

a) 2

b) ½

c) ¼

d) 4

3. Electromagnetic radiation travels through vacuum at a speed of _____ m/s.

a) 10,000

b) It depends on wavelenth

c) 3.00×10^{8}

d) 186,000

4. What is the frequency in Hz of electromagnetic radiation that has a wavelength of 0.53 m?

a) 1.3 Ã— 10^{-33}

b) 5.7 Ã— 10^{8}

c) 1.8 Ã— 10^{-9}

d) 1.6 Ã— 10^{8}

5.The de Broglie wavelength of an electron of kinetic energy 500 e V is

a) 54.92 Å

b) 0.5492 Å

c) 5492 Å

d) 5.492 Å

6. Which of the following isn't a truth about quantum mechanics?

a. Physicists are at a consensus about an interpretation of Quantum Mechanics.

b. An electron can seem to interfere with itself when passing through double slits.

c. Energy is quantized.

d. Momentum is quantized

e. A particle has a chance to be found in a region which should classically be impossible for it to be found in.

7. The square of the Schr¨odinger wave function is

A. Equal to one.

B. Not integrable.

C. A probability density.

D. Has no physical meaning.

E. Is only physical at relativistic speeds.

8. Which of the following problem in physics was created by quantum mechanics?

A. The particle/wave duality.

B. The ultraviolet catastrophe of blackbody radiation

C. The twin paradox

D. The barn-door paradox

E. The contradiction between the universal speed of light and Galilean transforms.

9. Suppose I have an atom that has 4 electrons with spin up and 3 electrons with spin down. If I'm able to ionize this atom by adding another electron, what spin will that electron be? Hint: How many electrons can one have in each shell?

A. Spin up

B. Spin down.

C. Neutral spin.

D. It is not possible to add another electron.

E. You have to add two electrons, not one.

10. Which of the following experiments could never show quantum mechanics?

A. Taking thousands of measurements and forming probabilistic models of those measurements.

B. Taking thousands of identically prepared particles and measuring them one at a time

C. Sending one electron at a time through a double-slit apparatus so that the electron can interfere with itself, and measuring the screen.

D. Sending one electron at a time through a double-slit apparatus and measuring which slit it goes through, so that the electron won't interfere with itself.

11. If I know the position of a subatomic particle precisely, then

A. I know nothing about the particle's momentum.

B. I known a very limited amount about the particle's momentum.

C. The particle must be at rest.

D. The particle can't be at rest.

12. Einstein's term "spooky action at a distance" was referring to:

A. The idea of entanglement, that two quantum particles could have connected natures no matter how far away they are from each other.

B. The idea from relativity that two observers in different inertial frames could age differently.

C. The idea from quantum mechanics that a particle could interfere with itself.

D. The ghost that was throwing Einstein's dishes around his kitchen when he wasn't around.

13. In the Quantum Eraser Experiment, the interference pattern vanishes when...

A. The detection screen is widened.

B. The detection screen is shortened.

C. The path the photon took is known.

D. The path the photon took is unknown.

14. Low temperature superconductors occur due to:

A. Electrons interacting with a lattice flow smoother

B. A quantum effect where paired electrons act as bosons

C. A quantum effect where paired electrons act as fermions

D. Isolated electrons resist thermal kick

15.According to the Dirac comb model, some materials are conductors and some materials are insulators due to:

A. If the atoms are closer together, the thermal kicks are harder.

B. The solution to the Schrodinger equation for the Dirac comb requires that some energy bands be empty due to the Heisenberg Uncertainty Principal.

C. A classical effect in which thermal kicks are too effective for certain ranges of energy.

D. $|\cos(\theta)| \leq 1$ restriction on the solution to Schrodinger's equation in the Dirac comb results in gaps in possible energy levels for electrons.

UNIT 2

SEMICONDUCTORS

1. A semiconductor is formed by …… bonds.
1. Covalent
2. Electrovalent
3. Co-ordinate
4. None of the above

2. A semiconductor has …… temperature coefficient of resistance.
1. Positive
2. Zero
3. Negative
4. None of the above

3. The most commonly used semiconductor is ……..
1. Germanium
2. Silicon
3. Carbon
4. Sulphur

4. A semiconductor has generally …… valence electrons.
1. 2
2. 3
3. 6
4. 4

5. The resistivity of pure germanium under standard conditions is about …….
1. $6 \times 10^4 \Omega$ cm
2. 60Ω cm
3. $3 \times 10^6 \Omega$ cm
4. $6 \times 10^{-4} \Omega$ cm

6. The resistivity of a pure silicon is about ……
1. $100\ \Omega$ cm
2. $6000\ \Omega$ cm
3. $3 \times 10^5\ \Omega$ m
4. $6 \times 10^{-8}\ \Omega$ cm

7. When a pure semiconductor is heated, its resistance ……..
1. Goes up
2. Goes down
3. Remains the same
4. Can’t say

8. The strength of a semiconductor crystal comes from ……..
1. Forces between nuclei
2. Forces between protons
3. Electron-pair bonds
4. None of the above

9. When a pentavalent impurity is added to a pure semiconductor, it becomes ……
1. An insulator
2. An intrinsic semiconductor
3. p-type semiconductor
4. n-type semiconductor

10. Addition of pentavalent impurity to a semiconductor creates many ……..

1. Free electrons
2. Holes
3. Valence electrons
4. Bound electrons

11. A pentavalent impurity has ……. Valence electrons

1. 3
2. 5
3. 4
4. 6

12. An n-type semiconductor is ……

1. Positively charged
2. Negatively charged
3. Electrically neutral
4. None of the above

13. A trivalent impurity has ….. valence electrons

1. 4
2. 5
3. 6
4. 3

14. Addition of trivalent impurity to a semiconductor creates many ……..

1. Holes
2. Free electrons
3. Valence electrons
4. Bound electrons

15. A hole in a semiconductor is defined as …….

1. A free electron
2. The incomplete part of an electron pair bond
3. A free proton
4. A free neutron

16. The impurity level in an extrinsic semiconductor is about ….. of pure semiconductor.

1. 10 atoms for 10^8 atoms
2. 1 atom for 10^8 atoms
3. 1 atom for 10^4 atoms
4. 1 atom for 100 atoms

17. As the doping to a pure semiconductor increases, the bulk resistance of the semiconductor ……..

1. Remains the same
2. Increases
3. Decreases
4. None of the above

18. A hole and electron in close proximity would tend to …….

1. Repel each other
2. Attract each other
3. Have no effect on each other
4. None of the above

19. In a semiconductor, current conduction is due to ……..

1. Only holes
2. Only free electrons
3. Holes and free electrons
4. None of the above

20. The random motion of holes and free electrons due to thermal agitation is called …….

1. Diffusion
2. Pressure
3. Ionisation
4. None of the above

UNIT III

1. A forward biased pn junction diode has a resistance of the order of

1. Ω
2. kΩ
3. MΩ
4. None of the above

2. The battery connections required to forward bias a pn junction are ……

1. +ve terminal to p and –ve terminal to n
2. -ve terminal to p and +ve terminal to n
3. -ve terminal to p and –ve terminal to n
4. None of the above

3. The barrier voltage at a pn junction for germanium is about ……

3. 5 V
4. 3 V
5. Zero
6. 3 V

4. In the depletion region of a pn junction, there is a shortage of ……..

1. Acceptor ions
2. Holes and electrons
3. Donor ions
4. None of the above

5. A reverse bias pn junction has ……

1. Very narrow depletion layer
2. Almost no current
3. Very low resistance
4. Large current flow

6. A pn junction acts as a …….

1. Controlled switch
2. Bidirectional switch
3. Unidirectional switch
4. None of the above

7. A reverse biased pn junction has resistance of the order of

1. Ω
2. kΩ
3. MΩ
4. None of the above

8. The leakage current across a pn junction is due to ……..

1. Minority carriers
2. Majority carriers
3. Junction capacitance
4. None of the above

9. When the temperature of an extrinsic semiconductor is increased, the pronounced effect is on……

1. Junction capacitance

2. Minority carriers
3. Majority carriers
4. None of the above

10. With forward bias to a pn junction , the width of depletion layer ……

1. Decreases
2. Increases
3. Remains the same
4. None of the above

11. The leakage current in a pn junction is of the order of

1. Aa
2. mA
3. kA
4. µA

22. In an intrinsic semiconductor, the number of free electrons ……

1. Equals the number of holes
2. Is greater than the number of holes
3. Is less than the number of holes
4. None of the above

23. At room temperature, an intrinsic semiconductor has …….

1. Many holes only
2. A few free electrons and holes
3. Many free electrons only
4. No holes or free electrons

24. At absolute temperature, an intrinsic semiconductor has …….

1. A few free electrons
2. Many holes
3. Many free electrons
4. No holes or free electrons

25. At room temperature, an intrinsic silicon crystal acts approximately as ……

1. A battery
2. A conductor
3. An insulator
4. A piece of copper wire

UNIT IV Lasers and Fibre Optics

1. Working of an optical fiber is based on _____.
    a. Total internal reflection
    b. Refraction
    c. Scattering
    d. None
2. The refractive index of the core is always greater than that of the cladding.
    a) True b) Falsec) Can't say d) Some times
3. The difference in the refractive indices of core and cladding must be _____.
    a. More

b. Small
c. uniform
d. None

4. The refractive index profile for the step index fiber is _____.
   a. step wise increase
   b. radially increasing
   c. constant value
   d. none
5. For graded index fiber the refractive index profile is _____.
   a. simple harmonic
   b. Step wise increase
   c. Radially increases
   d. None
6. In a graded index fiber, the refractive index gradually decreases from core to cladding.
   a) True b) False c) Can't say d) None
7. In a step index fiber, the difference in the refractive indices of core and cladding is __.
   a) Small b) Large c) Zero d) Unity
8. The refractive index difference in a step index fiber multi mode fiber is _____.
   a) Small b) Large c) Zero d) None
9. The inter-modal dispersion in an SI fiber is _____.
   a) Small b) Large c) Zero d) None
10. For small distance communication such as LAN _____ fibers are used.
    a. Single mode Step index
    b. Multi mode Step index
    c. Graded index
    d. None
11. For a graded index fiber the dispersion is _____.
    a) Small b) Large c) Zero d) None
12. Communication through the GI fiber is easier than in the SI fiber.
    a) True b) False c) Can't say d) None
13. Bending losses in optical fibers are due to _____.
14. Micro-bending losses arise due to _____.
15. Increase in the amplitude of a signal to maximum is called _____.
    a. attenuation
    b. amplification
    c. incremental amplitude
    d. None
16. For better signal transmission, the attenuation of the optical fiber must be _____.
    a. less
    b. more
    c. equal to average amplification
    d. None
17. Optical fibers absorb more in the _____ region of EM spectrum. (IR region)

a. Visible
b. UV
c. IR
d. Microwave

XII. GATE QUESTIONS: NA

XIII. WEBSITES:

1. www.motionmountain.com
2. www.einsteinhome.com
3. http://nptel.ac.in/

XIV. EXPERT DETAILS:

1. Prof. RavindranEthiraj, Retd Professor, Department of Physics, OU
2. Prof. P. Kishtaiah, Department of Physics, OU
3. Prof. Nagabhushanam, Department of Physics, OU
4. Prof. K. NarayanaRao, School of Physics , HCU

XV. JOURNALS:

INTERNATIONAL

1. Journal of Physics (American Institute of Physics)

NATIONAL

2. Indian Journal for Pure and Applied Physics.

XVI. LIST OF TOPICS FOR STUDENT SEMINARS:

1. Super conductivity-Applications
2. Nano materials -Applications
3. Magnetism-Applications
4. Quantum cryptography
5. Applications of Lasers and optical fibers

XVII. CASE STUDIES / SMALL PROJECTS:

1. Manufacture of a clap switch
2. Designing of solar charging battery
3. Frequency of AC sonometer
4. Understanding the properties of LASERs.
5. Optical fiber –Numerical aperture

ASSIGNMENT QUESTIONS

Assignment 1(Unit 1,2,3rd half)

1. Explain about black body radiation?
2. Derive planks law.
3. Explain De broglie hypothesis, and derive an expression for De broglie wavelength.
4. Derive Schrodinger time independent wave equation.
5. Derive an expression for carrier concentration of electrons in conduction band.
6. Explain about drift and diffusion in semiconductors
7. Explain the construction and working of BJT.
8. Explain about generation and recombination mechanisms.

Assignment 2 (Unit 3rd second half,4,5)

1. Write a note on semiconductor LASER.
2. What are photo detectors? How are they work?
3. What are the advantageous of Solar Cell?
4. Explain the construction and working of Ruby laser.
5. Derive an expression for Acceptance angle and define numerical aperture.
6. Define Ampere's law
7. Define Polarization, dielectric constant and permittivity.
8. Classify the magnetic materials.

Tutorial Topics

.

1. What are stimulated and spontaneous emissions?
2. Explain the characteristics of LASER light.
3. What is population inversion?
4. Derive the Einstein coefficients.
5. What is population inversion? Explain how it is achieved in a He – Ne LASER
6. Explain the construction and working of a Ruby LASER.
7. Explain the working of Carbon dioxide LASER.

HOLY MARY INSTITUTE OF TECHNOLOGY & SCIENCE

(Sponsored by Holy Trinity Educational Society)

Approved by AICTE, New Delhi, and Permanent Affiliation to JNTU, Hyderabad

Accredited by NAAC A Grade

Department of Electrical & Electronics Engineering

COURSE INFORMATION SHEET

PROGRAMME: **B.Tech** AC:YEAR: **2018-2019**	DEGREE: **B.TECH I YEAR**
COURSE: **BASIC ELECTRICAL ENGINEERING**	SEMESTER: I CREDITS: 3 COURSE COORDINATOR: **Mr. I.Rahul**
COURSE CODE: **EE103ES** REGULATION: **R18**	COURSE TYPE: CORE
COURSE AREA/DOMAIN: EEE	CONTACT HOURS: 4+1 (Tutorial) hours/Week.
CORRESPONDING LAB COURSE CODE (IF ANY): **EE108ES**	LAB COURSE NAME: **BASIC ELECTRICAL ENGINEERING LAB**

COURSE OVERVIEW:

- To introduce the concepts of electrical circuits and its components
- To understand magnetic circuits, DC circuits and AC single phase & three phase circuits
- To study and understand the different types of DC/AC machines and Transformers.
- To import the knowledge of various electrical installations.
- To introduce the concept of power, power factor and its improvement.

PRE-REQUISITES:

C.CODE	COURSE NAME	DESCRIPTION	SEM
1	General Physics	Basic Laws of Physics, Formulas	Inter
2	Mathematics	Basic Formulas, Differential Equations	Inter

MARKS DISTRIBUTION:

Session Marks	University End Exam Marks	Total Marks
Mid Semester Test • There shall be two midterm examinations. • Each midterm examination consists of subjective type and objective type tests. • The subjective test is for 10 marks of 60 minutes duration. • Subjective test of shall contain 4 questions; the student has to answer 2 questions, each carrying 5 marks. • The objective type test is for 10 marks of 20 minutes duration. It consists of 10 multiple choice and 10 objective type questions, the student has to answer all the questions and each carries half mark. • First midterm examination shall be conducted for the first two and half units of syllabus and second midterm examination shall be conducted for the remaining portion. **Assignment** • Five marks are earmarked for assignments. • There shall be two assignments in every theory course. Marks shall be awarded considering the average of two assignments in each course.	75	100

EVALUATION SCHEME:

S. No	Component	Duration	Marks
1	I Mid Examination	80minutes	20
2	I Assignment	-	5
3	II Mid Examination	80minutes	20
4	II Assignment	-	5
5	External Examination	3 hours	75

COURSE OBJECTIVES & OUTCOMES:

Course Objectives	Course Outcomes	Blooms Level
To introduce the concepts of electrical circuits and its components	To analyze and solve electrical circuits using network laws and theorems	BL1,2
understand magnetic circuits, DC circuits and AC single phase & three phase circuits	To understand and analyze basic Electric and Magnetic circuits	BL 1,2,4

understand the different types of DC/AC machines and Transformers	To study the working principles of Electrical Machines	BL 1,2,3
To import the knowledge of various electrical installations	To introduce components of Low Voltage Electrical Installations	BL 1,2,5
To introduce the concept of power, power factor and its improvement.	Understand the definitions of various power equations and its factors	BL 3,5,6

BLOOMS LEVEL (BL)

BL 1: Remember / knowledge BL2: Understanding BL3: Apply
BL 4: Analyze BL 5: Evaluate BL 6: Create

HOW PROGRAM OUTCOMES ARE ASSESSED:

Program Outcomes		Level	Proficiency assessed by	Blooms Level
A	Apply the knowledge of mathematics, science, engineering fundamentals, and an engineering specialization to the solution of complex engineering problems.	S	Solving Gate and Text book Problems	APPLY
B	Identify, formulate review research literature and analyze complex engineering problems reaching substantiated conclusions using first principle of mathematics, natural science and engineering science	S	Solving Gate and Text book Problems	APPLY
C	Design solutions for complex engineering problems and design system components or processes that meet the specified needs with appropriate consideration for the public health and safety, the cultural, societal, and environmental considerations.	H	Assignment and Gate questions	Apply and Analyze
D	Use research-based knowledge and research methods including design of experiments, analysis and interpretation of data, and synthesis of the information to provide valid conclusions.	S	Class Test & Group Activity	Apply
F	Apply reasoning informed by the contextual knowledge to assess societal, health, safety, legal and cultural issues and the consequent responsibilities relevant to the professional engineering practice.	N	--	--
G	Understand the impact of the professional engineering solutions in societal and environmental contexts, and demonstrate the knowledge of, and need for sustainable development.	H	Mini / Micro	Analyze and Justify

K	Demonstrate knowledge and understanding of the engineering and management principles and apply these to one's own work, as a member and leader in a team, to manage projects and in multidisciplinary environments	S	Mini and Micro Projects	Apply

N = None S = Supportive H = Highly Related

SYLLABUS:

EE103ES/EE203ES: BASIC ELECTRICAL ENGINEERING

B.Tech. I Year I Sem.

L	T	P	C
3	0	0	3

Course Objectives:

- To introduce the concepts of electrical circuits and its components
- To understand magnetic circuits, DC circuits and AC single phase & three phase circuits
- To study and understand the different types of DC/AC machines and Transformers.
- To import the knowledge of various electrical installations.
- To introduce the concept of power, power factor and its improvement.

Course Outcomes:

- To analyze and solve electrical circuits using network laws and theorems.
- To understand and analyze basic Electric and Magnetic circuits
- To study the working principles of Electrical Machines
- To introduce components of Low Voltage Electrical Installations

UNIT-I: D.C. Circuits

Electrical circuit elements (R, L and C), voltage and current sources, KVL&KCL, analysis of simple circuits with dc excitation. Superposition, Thevenin and Norton Theorems.
Time-domain analysis of first-order RL and RC circuits.

UNIT-II: A.C. Circuits

Representation of sinusoidal waveforms, peak and rms values, phasor representation, real power, reactive power, apparent power, power factor, Analysis of single-phase ac circuits consisting of R, L, C, RL, RC, RLC combinations (series and parallel), resonance in series R-L-C circuit.
Three-phase balanced circuits, voltage and current relations in star and delta connections.

UNIT-III: Transformers

Ideal and practical transformer, equivalent circuit, losses in transformers, regulation and efficiency. Auto-transformer and three-phase transformer connections.

UNIT-IV: Electrical Machines

Generation of rotating magnetic fields, Construction and working of a three-phase induction

motor, Significance of torque-slip characteristic. Loss components and efficiency, starting and speed control of induction motor. Single-phase induction motor. Construction, working, torque-speed characteristic and speed control of separately excited dc motor.
Construction and working of synchronous generators.

UNIT-V: Electrical Installations

Components of LT Switchgear: Switch Fuse Unit (SFU), MCB, ELCB, MCCB, Types of Wires and Cables, Earthing. Types of Batteries, Important Characteristics for Batteries. Elementary calculations for energy consumption, power factor improvement and battery backup.

Suggested Text-Books/Reference-Books:

1. Basic Electrical Engineering - D.P. Kothari and I.J. Nagrath, 3rd edition 2010, Tata McGraw Hill.
2. D.C. Kulshreshtha, "Basic Electrical Engineering", McGraw Hill, 2009.
3. L.S. Bobrow, Fundamentals of Electrical Engineering", Oxford University Press, 2011
4. Electrical and Electronics Technology, E. Hughes, 10th Edition, Pearson, 2010
5. Electrical Engineering Fundamentals, Vincent Deltoro, Second Edition, Prentice Hall India, 1989.

TOPICS BEYOND SYLLABUS/ADVANCED TOPICS/DESIGN:

1	OCC Characteristics of DC generator
2	Synchronous machines
3	Universal motors

WEB SOURCE REFERENCES:

B1	www.alljntuworld.in/jntu-hyderabad-jntuh-b-tech-2-1-r13-syllabus-books/ and http://www.alljntuworld.in/wp-content/uploads/2015/08/Mining-Engg..pdf
B2	http://ieeexplore.ieee.org/search/searchresult.jsp?newsearch=true&queryText=speed%20control%20of%20a%20dc%20motor
B3	www.engineershub.html http://engineershub.in//search?key=elements+of+electrical+and+electronics+engineering&searchTypeChange=updatesResults
B4	https://www.google.co.in/search?q=construction+of+pmmc&tbm=isch&tbo=u&source=univ&sa=X&ved=0ahUKEwiqsfilzrfJAhUUU44KHfa6CnsQsAQIMQ&biw=1366&bih=645

LECTURE PLAN

S.no	Unit no	Topic	Week	No of sessions planned	Mode of teaching BB/PPT/OHP/MM	Reference *	Remarks
1	1	D.C. Circuits	1	1	BB	A1,A2,A5	
2		Electrical circuit elements	1	1	BB	A1,A2,A5	
3		voltage and current sources	1	2	BB	A1,A2,A5	
4		KVL&KCL, analysis of simple circuits	2	3	BB	A1,A2,A5	
5		Superposition, Thevenin and Norton Theorems	2	2	BB	A1,A2,A5	
6		Time-domain analysis of first-order RL and RC circuits	3	1	BB	A1,A2,A5	
7	2	A.C. Circuits	4	2	PPT	A1,A2,A5	
8		Representation of sinusoidal waveforms, peak and rms values	4	2	PPT	A1,A2,A5	
9		phasor representation, real power, reactive power,apparent power	4	4	PPT	A1,A2,A5	
10		power factor, Analysis of single-phase ac circuits consisting of R, L, C, RL, RC, RLC combinations (series and parallel),	5	6	PPT	A1,A2,A5	
11		resonance in series R- L-C circuit.	5	2	PPT	A1,A2,A5	
12		Three-phase balanced circuits	6	2	PPT	A1,A2,A5	
13		voltage and current relations in star and delta connections.	6	2	BB	A1,A2,A5	
14	3	Transformers	7	2	BB	A1,A2,A5	
15		Ideal and practical transformer	8	2	BB	A1,A2,A5	

16		equivalent circuit, losses in transformers	8	2	BB	A1,A2,A5	
17		regulation and efficiency	9	2	BB	A1,A2,A5	
18		Auto-transformer and three-phase transformer connections.	10	4	BB	A1,A2,A5	
19	4	Electrical Machines	11	1	PPT	A1,A2,A5	
20		Generation of rotating magnetic fields,	12	1	PPT	A1,A2,A5	
21		Construction and working of a three-phase induction motor,	12	2	PPT	A1,A2,A5	
22		Significance of torque-slip characteristic.	13	1	PPT	A1,A2,A5	
23		Loss components and efficiency, starting and speed control of induction motor.	13	1	BB	A1,A2,A5	
24		Single-phase induction motor. Construction, working, torque-speed characteristic and speed control of separately excited dc motor	14	2	PPT	A1,A2,A5	
25		Construction and working of synchronous generators.	14	2	PPT	A1,A2,A5	
26		Electrical Installations	15	1	BB	A1,A2,A5	
27		Components of LT Switchgear: Switch Fuse Unit (SFU), MCB, ELCB, MCCB,	15	2	PPT	A1,A2,A5	
28		Types of Wires and Cables, Earthing	16	3	PPT	A1,A2,A5	
29		Types of Batteries, Important Characteristics for Batteries.	16	1	PPT	A1,A2,A5	
30		Elementary calculations for energy consumption, power factor improvement and battery backup.	16	3	BB	A1,A2,A5	

COURSE OUTCOMES:

S.No.	DESCRIPTION	PO MAPPING
1	To analyze and solve electrical circuits using network laws and theorems.	a,b,c,d,g,k
2	To understand and analyze basic Electric and Magnetic circuits	a,b,c,f
3	To study the working principles of Electrical Machines	a,b,c,g
4	To introduce components of Low Voltage Electrical Installations	a,b,c,d,f

UNIT WISE QUESTION BANK

QUESTION BANK ON SHORT ANSWER QUESTIONS

GROUP-I SHORT ANSWERS

S.No	QUESTION	BLOOMS TAXONOMY LEVEL	PROGRAM OUTCOME
	UNIT –I		
	DC MACHINES		
1	State Fleming's Right Hand Rule.	Remember	4
2	State Fleming's Left Hand Rule	Remember	4
3	What is the basic principle of a dc generator?	Remember	4
4	What are the basic parts of a dc generator?	Remember	4
5	Write down the emf equation of a dc generat r	Remember	4
6	What are the different types of dc generators?	Remember	4
7	Draw the circuit diagram of any two types of DC generators.	Remember	4
8	What is back emf in d.c. motor?	Remember	4
9	List out the different types of DC mo or.	Remember	4
10	Write down the torque equation of a D.C motor.	Remember	4
	UNIT-II **Transformers and their performance**		
1	Mention the difference between core and shell type transformers.	Evaluate	5
2	What is the purpose of laminating the core in a transformer?	Analyze	5
3	Give the emf equation of a transformer and define each term.	Remember	5
4	Does transformer draw any current when secondary is open? Why?	Understand	5
5	Define voltage regulation of a transformer.	Evaluate	5
6	What are the applications of step-up & step-down transformer?	Evaluate	5
7	How transformers are classified according to their construction?	Evaluate	5
8	Define transformation ratio.	Evaluate	5
9	Define voltage regulation of a transformer.	Evaluate	5
10	Explain mutual induction principle	Evaluate	5

GROUP-II (LONG ANSWER TYPE QUESTIONS)

S.No.	QUESTION	BLOOMS TAXONOMY LEVEL	PROGRAM OUTCOME
	UNIT-I **DC MACHINES**		
1	Explain the principle of operation of DC generator.	Understood	4
2	Give the classification of DC generator and explain	Remember	4
3	Derive the equation for induced EMF of a DC machine.	Remember	4
4	Derive the torque equation of DC motor.	Apply	4
5	Explain the principle of operation of DC Motor.	Apply	4
6	Give the classification of DC Motor and explain	Apply	4
7	Give the significance of back emf in a DC motor.	Apply	4
8	Explain about Swinburne's test of Dc shunt machine	Apply	4
9	Explain the speed control techniques of DC shunt motor	Apply	4
10	Differentiate between self-excited and separately excited d.c. machines.	Apply	4
	UNIT-II **Transformers and their performance**		
1	Describe the construction details of transformer.	Creating &analyse	5
2	Explain the principle of operation of transformer.	Analyse	5
3	Derive the EMF equation of a transformer.	Apply	5
4	Explain the principle of operation of single phase 2-win ing transformer.	Evaluate	5
5	Explain the losses in a Transformer	Remember &Evaluate	5
6	Obtain the condition for maximum efficiency f a transformer	Understand	5
7	Explain the OC test of a single phase transformer	Understand	5
8	Obtain the equivalent circuit of a single phase transformer	Understand	5
9	Explain the ON load co dition of a transformer	Creating &analyse	5
10	Explain the NO load condition of a transformer	Evaluate	5

GROUP-III (ANALYTICAL QUESTIONS)

UNIT-I
DC MACHINES

1	Calculate the e.m.f. by 4 pole wave wound generator having 65 slots with 12 conductors per slot when driven at 1200 rpm the flux per pole is 0.02 wb.	Apply	4
2	A dynamo has a rated armature current at 250 amps what is the current per path of the armature if the armature winding is lap or wave wound? The machine has 12 poles.	Apply	4
3	A 6 pole lap wound dc generator has 600 conductors on its armature flux per pole is 0.02 wb. Calculate i) The speed at which the generator must be run to generate 300v. ii) What would be the speed if the generated were wave wound?	Apply	4
4	An 8-pole , lap wound armature rotated at 350 rpm is required to generate 260v. the use ful flux per pole is 0.05 wb if the armature has 120 slots, calculate the number of conductors per slot.	Apply	4
5	The armature of a 6-pole ,600 rpm lap-wound generator has 90 slots, if each coil has 4 turns , calculate the flux per pole is required to generate an e.mf of 288 slots.	Apply	4
6	A 440v Dc shunt generator has Ra=0.25 ohms and Rsh= 220 ohms while delivering a load current of 50 amps ,it has a terminal voltage of 440v determined the generated e.m.f and power developed?	Apply	4
7	A Dc series generator has armature resistance of 0.5 ohms and series field resistance of 0.03 ohms it drives a load of 50 amps. if it has 6 turns/coil and total 540 coils on the armature and is driven at 1500 rpm calculate the terminal voltage at the load. Assume 4-poles, lap type win ing, flux pole	Apply	4
8	A30 kw, 300v dc shunt generator has armature and field resistances of 0.05 ohms and 100 ohms respectively. Calculate the t tal power developed by the armature when it is delivered full load o/p.	Apply	4
9	A compound generator is to supply a load of 250 lamps each rated at 100w,250v. the armature, series and sh nt windings have resistances of 0.06 respectively. Determine the genera ed e.m.f when machine is connected in i) long shunt ii) short shunt. Take drop per brush as 1v	Apply	4

10	A 4-pole lap wound dc shunt generator has a useful flux per pole of 0.07 wb. The armature winding consists of 220 turns, each of 004 ohms resistance. Calculate the terminal voltage when running at 900 rpm if the armature current is 50 amps.	Apply	4
UNIT-II **Transformers and their performance**			
1	A transformer supplied a load of 32A at 415V. If the primary voltage is 3320V,find the following: (a) Secondary volt ampere (b) Primary current (c) Primary volt ampere. Neglect losses and magnetizing current.	Creating &analyse	5

2	A 125 KVA transformer having primary voltage of 2000V at 50 Hz has 182 primary and 40 secondary turns. Neglecting losses, calculate: i) The full load primary and secondary currents. ii) The no-load secondary induced emf.	Evaluate	5
3	A single phase transformer has 50 primary and 1000 secondary turns. Net cross sectional area of the core is 500 cm2. If the primary winding is connected to 50 Hz supply at 400 V, Calculate the value of Maximum flux density on core and the emf induced in the secondary.	Evaluate	5
4	A transformer with 40 turns on the high voltage winding is used to step down the voltage from 240V to 120V. Find the number of turns in the low voltage winding. Open circuit and short circuit tests on a 5 KVA, 220/400V, 50 Hz, single phase transformer gave the following results: OC Test: 220V, 2A, 100W (lv side) SC Test: 40V, 11.4A, 200W (hv side) Obtain the equivalent circuit.	Analyse	5
5	A single phase 50Hz transformer has 80 turns on the primary winding and 280 in the secondary winding . The voltage applied across the primary winding is 240 V. Calculate (i) the maximum flux density in the core (ii) induced emf in the secondary winding. The net cross sectional area of the core can be taken 200cm2.	Evaluate	5
6	Open Circuit and shrot circuit tests on a single phase transf rmer gave the following results. V0=200V, I0=0.7A, WO=20W ---------- test rom primary side VS =10V, IS =10A, WS =40W ---------- test from primary side. Determine the equivalent circuit referred to prima y side.	Evaluate	5
7	A 15kVA 2400-240-V, 60 Hz transformer has a magnetic core of 50-cm2 cross section and a mean length of 66.7 cm. The application of 2400 V causes magnetic field intensity of 450 AT/m (RMS) and a maximum flux density of 1.5 T . Determine i. The turn's ratio ii. The number of turns in each winding iii. The magnetizing current	Understand	5
8	The emf per turn of a 1- φ, 2200/220 V, 50 Hz transformer is approximately 12V. Calculate i) The number of primary and secondary turns, and ii) The net cross-sectional area of core for a maximum flux density of 1.5 T	Remember	5
9	The efficiency of a 400 kva ,single phase transformer is 98.77% when	Apply	5

	delivering full-load at 0.8 pf lagging and 99.13% at half load at unity power factor calculate i) iron losses and full load copper losses.		
10	A 440/110 v transformer has a primary resistance of 0.03 ohms and secondary resistance of 0.02 ohms if iron losses at normal input is 150 watts determine the secondary current at which maximum efficiency will occur and the value of this maximum efficiency at a unity power factor load.	Remember	5

Group – I QUESTION BANK ON SHORT ANSWER QUESTION

S.No	QUESTION	BLOOMS TAXONOMY LEVEL	COURSE OUTCOME
	UNIT-IV ALTERNATORS		
1	State different type of synchronous generat rs used in hydro electrical power station.	Evaluate	1
2	What are the main parts of synchronous generator	Remember	1
3	Write the EMF equation of an Alternator.	Remember	2
4	What is the speed of a 4 pole 50Hz Synchronous machine?	Remember	2
5	Define Synchronous speed.	Remember	1
6	How can a DC generator be converted into an alternator?	Remember	2
7	Discuss about armature reaction in synchronous generator	Understand	1
8	Define distribution factor.	Understand	1
9	Define pitch factor.	Remember	2
10	Define winding factor.	Remember	2
1	Write different methods for determining the voltage regulation of synchronous generator.	Remember	3
2	Define regulation of Alternator.	Remember	3
3	What are the components of synchronous impedance?	Remember	4
4	Discuss the importance of synchronous impedance method	Remember	4
5	Discuss two reaction analysis	Remember	3
6	Define Xd and Xq	Remember	3
7	Why voltage regulation calculated by Potier's method is somewhat lower?	Remember	4
8	What are the parameters can be determined from slip test	Understand	4

S.No	QUESTION	BLOOMS TAXONOMY LEVEL	COURSE OUTCOME
9	What are the differences between MMF and EMF methods	Understand	3
10	Distinguish between salient pole and cylindrical rotor synchronous generators?	Remember	4
	UNIT-V		

SINGLE PHASE MOTORS & SPECIAL MACHINES			
1	What are the applications of AC series motor?	Remember	8
2	What is stepper motor?	Remember	9
3	What is the function of capacitor in a single phase induction motor?	Remember	10
4	In which direction does a shaded pole induction motor run?	Remember	9
5	Write the classification of stepper motor?	Remember	6
6	Why singe phase induction motor has low power factor?	Remember	10
7	What is meant by split phase motor?	Remember	9
8	What are the advantages of universal motor?	Remember	8
9	What are the applications of universal motor?	Remember	10
10	What are the applications of stepper motor	Remember	9

Group – II LONG ASNWERS QUASTIONS

UNIT-IV SYNCHRONOUS MACHINES AND CHARACTERISTICS			
S.No	**QUESTION**	**BLOOMS TAXONOMY LEVEL**	**COURSE OUTCOME**
1	Deduce the relation between the number of poles, the frequency and the speed of the synchronous generator	Apply	1
2	What are the causes of harmonics in the voltage waveform of an alternator?	Understand	1
3	What is an armature reaction? Explain its effect on the terminal voltage of an alternator at unity power factor load.	Understand	1
4	In brief, derive an expression for the winding factor of an alternator	Apply	2
5	Derive EMF equation and how induced 'emf' in describe the armature winding is affected by (a) form factor (b) pitch factor and (iii) distribution factor	Apply	2
6	Discuss about the determination of synchronous reactance of an alternator	Understand	2
7	Draw the load characteristics of synchronous generator and describe the same	Apply	2
8	What is the difference between integral slot and fractional slot windings	Understand	1
9	With phasor diagram, discuss about the leakage reactance of synchronous generator	Apply	1
10	Compute the distribution factor for a 36-slot, 4-pole, single-layer 3-Phase winding.	Apply	2
1	Discuss in brief, how voltage regulation can be computed by synchronous impedance method	Understand	2
2	Discuss in brief about the two-reaction analysis f a salient-pole synchronous machine	Understand	2
3	With relevant waveforms and connection diagram, describe the slip test of synchronous machine	Apply	3
4	What is the significance of zero power-factor characteristics of an alternator? Discuss in brief to ob ain he same	Apply	2
5	Describe why, synchronous impedance method of computing the voltage regulation, leads to a pessimistic value at lagging power factor loads	Understand	3
6	Describe how, open-circuit and short-circuit tests are conducted on a synchronous machine	Understand	3
7	Discuss in brief, how voltage regulation can be computed by MMF method.	Understand	3
8	Discuss in brief, how voltage regulation can be computed by ASA method.	Understand	3
9	Discuss in brief, how voltage regulation can be computed for salient pole alternators.	Understand	3

10	A synchronous generator has X_d=0.75 pu and X_q=0.5 pu. It is supplying full-load at rated voltage at 0.8 lagging power factor. Draw the phasor diagram and compute the excitation emf	Apply	2
UNIT-V SINGLE PHASE MOTORS & SPECIAL MACHINES			
1	Discuss in detail about the split-phase motors	Understand	6
2	Discuss about the principle and performance of AC series motor	Understand	6
3	Describe the phase control of 1-phase induction motor	Remember	6
4	Write a short notes on double revolving field theory	Remember	6
5	Discuss about Torque-Speed curve of single-phase induction motor	Apply	6
6	Show that the starting torque of a single phase-phase induction motor is zero	Apply	6
7	With a neat sketch, discuss about the operation of shaded pole motor with squirrel cage rotor	Understand	6
8	What type of operating characteristics does an ac series motor give?	Understand	6
9	What is the principle of operation of universal motor?	Understand	7
10	What is the principle of operation of stepper motor?	Understand	7

GROUP – III ANALYTICAL QUESTIONS

S.No	QUESTIONS	BLOOMS TAXONOMY LEVEL	COURSE OUTCOME
	UNIT-IV **SYNCHRONOUS MACHINES AND CHARACTERISTICS**		
1	Calculate the speed and open-circuit line and phase voltages of a 4-pole,3-phase,50hz star-connected alternator with 36 slots and 30 slots 30 conductors per slot. The flux per pole is 0.05wb.	Evaluate	2
2	A 4-ploe, 50hz star-connected alternator has a flux per pole of 0.12wb. it has 4 slots per pole per phase, conductors per slot being 4.if the winding coil span is 150^0,find the emf.	Apply	2
3	A 3-phase,8-pole,750rpm star-connected alternator has 72 slots on the armature. Each slot has 12 conductors and winding is short-pitched by 2 slots. Find the induced emf between lines, given the flux per pole is 0.06wb	Apply	2
4	An 8-pole,3-phase,60^0 spread, double layer winding has 72 coils in 72 slots. The coils are short-pitched by two slots. Calculate the winding factor for the fundamental and third harmonic.	Evaluate	2
5	The stator of a 3-phase,20-pole alternator has 120 slots and there are 4 conductors per slot accommodated in two layers. If the speed of the alternator is 300rpm, calculate the emf induced per phase. Resultant flux in the air-gap is 0.05 wb per pole. Assume the coil span as 160^0 electrical.	Evaluate	2
6	A star-connected,3-phase,6-pole alternator has a stator with 90 slots and 8 conductors per slot.the rotor revolves at 1000rpm. The flux per pole is $4x10^{-2}$ wb. calculate the emf generated if all the conductors in each phase are in series. Assume sinusoidal flux distribution and full-pitched coils.	Evaluate	2
7	A 16 pole,3-phase alternator has a star-connected winding with 144 slots and 10 conductors per slot. The flux per pole is distributed 0.03wb sinusoidally and the speed is 375 rpm. Find the line voltage, if the coil span is 150^0 elec.	Apply	3
8	A 3-phase,16-pole alternator has the f ll wing data: number of slots=192,conductors per slot=8,coil span 10 slots; speed of alternator=375rpm;flux per pole =55mwb.calculate the phase and line voltage.	Evaluate	3
9	For a 3-Φ winding with 4 slots per pole phase and with the coin span of 10 slot pitch, calculate the values he distribution factor and coil span of factor.	Evaluate	3
10	An 8-pole ac generator is ru i g at 750rpm. What is the frequency? At what speed must the generator be run so that frequency shall be 25hz?	Apply	3
1	A 3-phase star-connected synchronous generator is rated at 1.4MVA, 11KV. the armature effective resistance and synchronous reactance are 1.2 Ω and 25Ω respectively per phase. Calculate the percentage voltage regulation	Evaluate	4

	for a load of 1.4375MVA at (i) 0.8pf lagging and (ii) 0.8pf leading. also find out the pf at hich the regulation becomes zero.		
2	A 3-phase, star-connected alternator is rated at 1600kva, 13500v. The armature resistance and synchronous reactance are 1.5 Ω and 30Ω respectively per phase. Calculate the percentage regulation for a load of 1280kw at 0.8leading power factor.	Evaluate	4
3	From the following test results, determine the regulation of a 2 KV single phase alternator, delivering a current of 100 A at 0.8 p.f. leading test results; full load current of 100 A is produced on short circuit by a field excitation of 2.5 A. An emf of 500 V is produced on open circuit by the same field current. The armature resistance is 0.8 ohms.	Apply	4

S.No	QUESTIONS	BLOOMS TAXONOMY LEVEL	COURSE OUTCOME
4	A three phase star connected 1000 KVA, 11000 V alternator has rated current of 52.5 A the ac resistance of the winding per phase is 0.45 Ohms. The test results are given below; OC test : field current = 12.5 A, voltage between lines = 422 V. SC test: field current = 12.5 A , line current = 52.5 A determine the full load voltage regulation of the alternator a) 0.8 p.f. lagging b) 0.8 p.f. leading	Evaluate	4
5	A)A three phase star connected, 5KVA, 400 V, 50 Hz, 4-pole alternator has the following test data at rated speed i) exciting current 0.5 1 1.5 2 2.5 3 3.5 4 4.5 5 6 8 Per phase OC Volts 75 140 173 202 224 270 250 257 260 263 266 271 ii) exciting current 1 2 3 SC line current 3.6 7.2 10.8 iii) Armature resistance per phase is 2 ohms Draw OC and SC characteristics on a graph paper and then determine unsaturated value of synchronous reactance per phase and in per unit. B) For the same synchronous machine, a) determine percentage voltage regulation at rated load at 0.8 p.f. lag and lead by synchronous impedance method under unsaturated condition. Draw relevant phasor diagrams.	Apply	4
6	A 3-phase star-connected, 1000kva, 2000v, 50hz alternator gave the following open-circuit and short circuit test readings: Field 30 40 current(amp): 10 20 25 50 Open-circuit 800 1500 1760 2000 2350 voltage(v): 2600 Short-circuit current(amp):- 25 200 0 300 - - Draw the characteristic curves and estimate the full-load percentage regulation at i)0.8 p.f. lagging and (ii) 0.8 p.f. ea ing. the armature resistance per phase may be taken as 0.2Ω.use mmf method	Apply	4
7	A 3-phase synchronous generator has per phase a direct axis synchronous reactance of 1.0p.u. And a quadrature axis synchronous reactance of 0.65 pu. Draw a phasor diagram of the hen operating at full-load at a pf machine 0.8 lagging and estimate from there (i) the load angle and (ii)pu no-load emf. Neglect armature resistance.	Apply	4

8	A 3.5 MVA, slow speed,3-phase sy chronous generator rated at 6.6kv has 62 poles. It's direct and quadrature axis synchronous reactance as measured by the slip test is 9.6 and 6 Ω respectively. Neglect armature resistance; determine the regulation and excitation emf needed to maintain 6.6kv at the terminals when supplying a load of 2.5MW at 0.8pf lagging. What maximum power can generator supply at the rated terminal voltage, if the field becomes open-circuited?	Evaluate	4
9	A 10kva, 380v, 50hz,3-phase,star-connected salient pole alternator has direct axis and quadrature axis reactance of 12Ω and 8Ω respectively. The armature has a resistance of 1Ω per phase. The generator delivers rated load at 0.8pf lagging with the terminal voltage being maintained at rated value. If the load angle is 16.15^{0}, determine (i)the direct axis and quadrature axis components of armature current (ii)exciting voltage of the generator.	Apply	4
10	The following data pertains to a 15000 kva,11kv,3-phase,50hz,star-connected turbo-alternator: OC line kv :4.9 8.4 10.1 11.5 12.8 13.3 13.65 Field AT in 10^3 :10 18 24 30 40 45 50 Zero p.f. full-load line kv : - 0 - - - 10.2 - Determine: (i) armature reaction (ii) armature reactance (iii) synchronous reactance (iv) percentage regulation for full-load at 0.8 p.f. lagging.	Apply	4

UNIT-V
SINGLE PHASE MOTORS & SPECIAL MACHINES

S.No	QUESTIONS	BLOOMS TAXONOMY LEVEL	COURSE OUTCOME
1	A 2-winding single-phase motor has the main auxiliary winding currents I_m=15 A and I_a=7.5 A at stand-still. The auxiliary winding current leads the main winding current by $\alpha=45^0$ electrical. The two winding are in space quadrature and the effective number of turns are N_m=80 and N_a=100. Compute the amplitudes of the forward and backward stator *mmf* waves. Also determine the magnitude of the auxiliary current and its phase angle difference α with the main winding current if only the backward field is to be present.	Evaluate	8
2	A stepper motor driven by a bipolar drive circuit has the following parameters: winding inductance = 30 mH, rated current = 3A, DC supply = 45V, total resistance in each phase = 15Ω. When the transistors are turned off, determine (i) the time taken by the phase current to decay to zero and (ii) the proportion of the stored inductive energy returned to the supply.	Evaluate	10
3	A stepper motor has a step angle of 3°. Determine (a) resolution (b) number of steps required for the shaft to make 25 revolutions and (c) shaft speed, if the stepping frequency is 3600 pps.	Apply	10
4	A stepper motor has a step angle of 1.8°. What number should be loaded into the encoder of its drive system if it is desired to turn on the shaft ten complete revolutions?	Evaluate	10
5	What is the motor torque T_m required to accelerate an initial load of $3*10^{-4}$ kg m^2 from f_1 = 1000 Hz to f_2 = 2000 Hz during 100 ms. The frictional torque T_f is 0.05 N-m and the step angle is 1.8°.	Apply	10
6	A 250W single phase 50hz 220v universal motor runs at 2000rpm and takes 1 A when supplied from a 220V dc supply. If the motor is connected to 220V ac supply and takes 1A(r m s), calculate the speed, torque and power factor, assume Ra=20Ω and La=0.4H	Evaluate	8
7	A universal series motor has a resistance of 30Ω and an inductance of 0.5H. when connected to a 250V DC supply and loaded to take 0.8A,it ns at 2000rpm. Estimate its speed and power factor when connected to a 250V, 50hz ac supply and loaded to take the same current.	Evaluate	8
8	Find the mechanical power output of 185kw, 4 pole, 110V, 50Hz single phase induction motor, whose constants are given below at a slip of 0.05. R1=1.86Ω, X1=2.56 Ω, Xϕ=53.5 Ω, R2=3.56 Ω X2=2.56 Ω core loss 3.5w, friction and wind age loss 13.5w	Evaluate	10
	A 250w, 230V, 50Hz capacitor start motor has the f llowing constants for the	Apply	8

9	main and auxiliary windings: main winding, Zm=(4.5+3.7i)Ω. Auxiliary winding Za=(9.5+3.5i)Ω. Determine the value of the starting capacitor that will place the main and auxiliary winding currents in quadrature at starting.		
10	A single phase induction motor has s ator windings in space quadrature and is supplied with a single phase vol age of 200V at 50Hz. The standstill impedance of the main wi di g is (5.2+10.1i) and the auxiliary winding is (19.7+14.2i). find the value of capacitance to be inserted in the auxiliary winding for maximum starting torque.	Apply	8

GROUP-I (SHORT ANSWER TYPE QUESTIONS)

S.No	QUESTION	BLOOMS TAXONOMY LEVEL	COURSE OUTCOME
	UNIT-II SINGLE PHASE TRANSFORMERS		
1	Mention the differences between core and shell type transformers.	Evaluate	1
2	Give the emf equation of a transformer and define each term	Apply	1
3	What are the applications of step-up & step-do n transformer?	Apply	1
4	What types of cores are used for transformers?	Evaluate	1
5	Discuss the purpose of Oil used in the transformer.	Understand	1
6	On what size the construction of bushings in a transformer depend?	Evaluate	1
7	Discuss about copper losses in a transformer.	Analyze	1
8	Discuss about Eddy current loss in transformer.	Analyze	1
9	Discuss about Hysteresis loss in a transformer.	Analyze	3
10	Discuss all day efficiency	Analyze	3
1	Define voltage regulation of a transformer. What causes a change in secondary terminal voltage of transformer as it is loaded?	Remember	3
2	Does the transformer draw any current when secondary is open	Apply	3
3	Differentiate a classical transformer with an auto transformer.	Apply	3
4	Discuss whether the transformers can be used in parallel	Analyse	3
5	What is impedance in transformers?	Evaluate	3
6	Why is the short circuit test performed at reduced voltage on the HV side?	Understand	3
7	Is the sumpner's test data used for pre-determination of regulation of transformer? Justify the answer.	Remember	3
8	Discuss why Sumpner's test is beneficial for finding efficiency?	Remember	3
9	State any two important conditions to be satisfied for satisfactory and successful operation of transformers connected in parallel.	Evaluate	3

10	Is the efficiency of a transformer same at the same load at 0.8 pf lag and 0.8 pf lead?	Remember	3

UNIT-1II
3-PHASE INDUCTION MOTORS

1	What is meant by cascade operation?	Evaluate	5
2	What do you mean by AC three-phase ind ction motor?	Understand	5
3	On what principle does the I ducion motor work?	analyze	5
4	What are the types of induction motors?	Evaluate	5
5	What are the main parts of AC three-phase induction motor?	Evaluate	5
6	In what ratio line current and starting torque is reduced with star-delta starting?	Apply	5
7	In a poly phase squirrel-cage induction motor, increased starting torque can be obtained by	Apply	5
8	The ratio among rotor input, rotor output and rotor Cu losses are?	analyze	5
9	How a rotor rotates in an Induction motor? Explain.	Remember	5
10	Discuss about slip in an Induction motor.	Remember	5
1	What are the advantages of auto transformer starting?	Analyze	6
2	What are the advantages of slip ring Im over squirrel cage IM?	Analyze	6
3	In a 3 phase induction motor running at slip 's' the mechanical power developed in terms of input power P2 is.	Apply	6
4	Discuss about direct online starting of an IM?	Apply	6
5	How do changes in supply voltages and frequency affect the performance of an IM?	Remember	6
6	Why no-load current of an Induction motor is much higher than that of an equivalent transformer?	Evaluate	6
7	The torque of a three-phase induction motor can be increased by increasing hat?	Apply	6
8	On what factors does the speed of an Induction motor depends?	Analyze	6
9	Why the induction generator is often called as asynchronous generator?	Evaluate	6
10	What is the application for Induction generators?	Apply	6

S.No	QUESTION	BLOOMS TAXONOMY LEVEL	COURSE OUTCOME
1	Give the concept of single phase ideal transformer. Describe its pe fo mance with the help of neat phasor diagram.	analyze	1
2	Explicate in detail with a neat diagram about the constructi nal details of single phase transformers.	analyze	1
3	Derive the EMF equation of transformer? Hence derive the voltage ratio.	Evaluate	1
4	What is the efficiency of transformer? How the efficiency of transformer can be calculated?	Evaluate	1
5	Discuss the effect of variable frequency and supply voltage on iron loss and performance of the transformer?	Analyze	1
6	Define voltage regulation of a transformer & enumerate the factors which influence the magnitude of this change?	Evaluate	1
7	Draw the exact equivalent circuit of a transformer and describe briefly the various parameters involved in it?	Evaluate	1
8	Define 'efficiency' and 'all-day efficiency' of a transformer. Mention how these are affected by the power factor?	Analyze	1
9	Draw the complete phasor diagram for a transformer, when the load power	Apply	1

	factor is i) Lagging ii) Leading.		
10	Discuss the different losses taking place in the transformer and their variation with the load current.	Evaluate	1
1	With neat diagram, discuss the various tests to be conducted on transformer to obtain its equivalent circuit. Derive all related equations.	Evaluate	2
2	Describe the tests to be done on a single phase transformer to determine the equivalent circuit parameters.	Evaluate	2
3	Discuss about parallel operation of transformers for unequal voltages ratios.	Analyze	3
4	OC test is preferred to conduct on LV side & SC test is preferred to conduct on HV side. Describe the reasons.	Apply	3

GROUP-II (LONG ANSWER QUESTIONS)
UNIT II

5	Discuss why parallel operation of transformers is necessary. Under what conditions, the no-load circulating current is zero in two single-phase transformers operating in parallel?	Evaluate	3
6	Suggest a suitable test to predetermine the efficiency of a transformer and discuss it	Apply	3
7	Describe the method by which the separation of the core losses of a transformer is achieved.	Analyze	3
8	With the help of neat experimental circuit, explain how Sumpner's test is carried out on a pair of single phase transformer.	Evaluate	3
9	Derive an expression for load sharing between two transformer operating in parallel with equal voltage ratios.	Evaluate	3
10	Derive an expression for load sharing between two transformer operating in parallel with unequal voltage ratios.	Evaluate	3
UNIT-III **3-PHASE INDUCTION MOTORS**			
1	Describe the principle construction and operation of Induction motor.	Understand	5
2	Discuss the various losses taking place in IM. Explain the effect of slip on the Performance of IM.	understand	5
3	Derive the torque equation of an induction motor. Mention the condition for maximum torque.	analyze	5
4	Describe how rotating magnetic field is developed in induction motor.	understand	5
5	Discuss the following (a) How torque is developed in the rotor of a induction motor. (b) Why in some induction motors double cages are provided?	understand	5
6	Why the rotor of a poly phase induction motor can never attain synchronous speed? Discuss.	understand	5

7	Describe the constructional features of both slip ring and squirrel cage induction motor. Discuss the merits of one over the other.	Understand	5
8	With neat diagram describe the equivalent circuit of 3phase Double Cage IM.	analyze	5
9	Draw the phasor diagram of an Induction motor and explain.	analyze	5
10	With a neat sketch discuss the principle of operation of double cage Induction motor Briefly explain the torque slip characteristics of an Induction motor.	understand	5
1	With neat diagram discuss the various tests to be conducted on 3phase IM to plot the circle diagram.	Apply	6
2	Compare DOL starter, Auto transformer starter & Rotor re-sistance starter with relate to the following: (i) starting current (ii) starting torque.	Evaluate	6
3	Calculate the minimum torque. Assume stator and rotor copper losses equal at standstill.	Evaluate	6
4	Describe the speed control of IM by rotor resistance control method. How this method of speed control is different from stator side speed control methods	Evaluate	6
5	Compare the speed control of 3phase IM by rotor resistance control & variable frequency control	Apply	6
6	What happens if the emf is injected to the rotor circuit of inducti n motor?	Analyse	6
7	With the help of experimental circuit, describe how the equivalent circuit parameters are determined by no load and blocked rotor tests on 3 phase Induction motor.	Apply	6
8	With the help of a neat diagram, describe the w king of a star - delta starter.	Apply	6

GROUP-III (ANALYTICAL QUESTIONS)

S.No	QUESTIONS	BLOOMS TAXONOMY LEVEL	PROGRAMOUTCOME
	UNIT-I SINGLE PHASE TRANSFORMERS		
1	A 15kVA 2400-240-V, 60 Hz transformer has a magnetic core of 50-cm2 cross section and a mean length of 66.7 cm. The application of 2400 V causes magnetic field intensity of 450 AT/m (RMS) and a maximum flux density of 1.5 T . Determine i. The turn's ratio	Understand	4

	ii. The numbers of turns in each winding iii. The magnetizing current.		
2	The exciting current for a 50 kVA, 480/240V 50 Hz transformer is 2.5% of rated current at a phase angle of 79.80. Find the components of magnetizing current & loss component. Also find the magnetizing reactance & core loss resistance.	Understand	4

3	The voltage ratio of single phase 50 Hz transformer is 5000/500 V at no-load. Calculate the number of turns in each winding, if the value of the flux in the core is 7.82 mWb.	Understand	4
4	The emf per turn of a 1- φ, 2200/220 V, 50 Hz transformer is approximately 12V. Calculate i) The number of primary and secondary turns, and ii) The net cross-sectional area of core for a maximum flux density of 1.5 T.	Understand	4
5	A 30 KVA, 2400/120V, 50Hz transformer has a high voltage winding resistance of 22Ω. The low voltage winding resistance is 0.035Ω and leakage reactance is 0.012Ω. Find the equivalent circuit parameters when referred to the low voltage side.	Remember	4
6	A single phase, 50 Hz core type transformer has square cores of 20 cm side. The permissible flux density in the core is 1.0 Wb/m2. Calculate the number of turns per limb of the high and low voltage sides for a 3000/220V ratio. To allow for insulation of stampings, assume the net length to be 0.9xGross iron length.	Evaluate	4
7	125 KVA transformer has a primary voltage of 2000V at 60Hz, primary turns are 182 and secondary turns are 40. Neglecting losses calculate i) No load secondary emf. ii) Flux in the core.	Apply	4
8	A transformer takes 0.8A when its primary is connected to 200V, 50 Hz supply. The secondary is open circuited. The power absorbed from the supply is 60 watts. Determine the iron loss current and magnetizing current.	Analyze	4
9	A 100KVA lightening transformer has a full load loss of 3 KW, the losses being equally divided between iron and copper. During a day the t ansformer operates on full load for 3 hours, one half loads for 4 hours and the output being negligible for remaining of the day. Calculate all day e iciency	Apply	4
10	Find the all day efficiency of 500KVA distribution trans ormer whose cu loss and iron loss at full load are 4.5 kw and 3.5 kw respectively. During a day of 24 hours, it is loaded under No of hrs — loading in KW — pf 6 — 400 — 0.8 12 — 350 — 0.75 4 — 150 — 0.8 2 — 0 — -----	Apply	4
	A 300 KVA, single - phase tra sformer is designed to have a resistance		

1	of 1.5% and maximum efficiency occurs at a load of 173.2 KVA. Find its efficiency when supplying full-load at 0.8 p.f lagging at normal voltage and frequency.	Remember	4
2	Calculate the regulation of a transformer in which the Ohmic loss is 1% of the output and the reactance drop is 4% of the voltage, when the power factor is 0.8 lagging, leading and unity.	Understand	4
3	A 100 KVA, 50 Hz, 440/11000 V, 1-phase transformer has an efficiency of 98.5% when supplying full- load current at 0.8 p.f and an efficiency of 99% when supplying half full-load current at unity p.f. Find the iron losses and copper losses corresponding to full load current.	Remember	4
4	Calculate the voltage regulation for a 200/400 V, 4 kVA transformer at full load & pf. 0.8 lagging with following test data: OC test: 200 V, 0.8 A, 70 W (LV side) SC test: 20 V, 10 A, 60 W (HV side)	Understand	4
5	In Sumpner's test on two identical transformer rated 500 kVA, 11/0.4 kV, 50 Hz, the wattmeter reading on HV side is 6 kW on rated voltage and on LV side is 15 kW when circulated full load current. Find the efficiency of each transformer on 3/4th load & 0.8 pf lagging. What will be the maximum efficiency of each transformer?	Apply	4

6	The iron loss in a transformer core at normal flux density was measured at frequency of 30 Hz and 50 Hz, the results being 30 W and 54 W respectively. Calculate (i) The hysteresis loss and (ii) The eddy current loss at 50 Hz.	Remember	4
7	The following results were obtained from tests on 30 KVA, 3000/110 V, and transformer O.C. test: 3000 V, 0.5 A, 350 W S.C. test: 150 V, 10 V, 500 W Calculate the efficiency of the transformer at full load with 0.8 lagging power factor.	Apply	4
8	In a test for determination of the losses of a 440V, 50 Hz transformer, the total iron losses were found to be 2500W at normal voltage and frequency. When the applied voltage and frequency were 220V and 25Hz, the iron losses were found to be 850W. Calculate the eddy current loss at normal voltage and frequency.	Remember	4
9	Calculate the regulation of a transformer in which the Ohmic loss is 1% of the output and the reactance drop is 4% of the voltage, when the power factor is 0.8 lag, lead and unity.	Apply	4
10	240V/120V, 12KVA transformer has full load unity p.f. efficiency of 96.2%. It is connected as an autotransformer to feed a load at 360V. What is its rating and full load efficiency at 0.85 p.f. lagging?	Apply	4

	and 0.707 p.f. (lag) and the 3- phase line voltage is 3,300V. The 300KW load is on the leading phase on the 2-phase side. Neglect transformer losses.		
11	A 3 phase step down transformer is connected to 6.6KV mains and takes 10A. The ratio of turns per phase is 12. Neglect losses. Calculate the secondary line voltage, line current and output for the following connections(i) Y/Δ (ii)Δ/Y.	Apply	4
12	Two transformers are connected in open-delta and supply a balanced 3 phase load of 240 KW at 400V and a p.f of 0.866. Determine: (i)Secondary line current (ii) the kva load on each transformer	Apply	4

UNIT-III
3-PHASE INDUCTION MOTORS

1	The frequency of stator EMF is 50 Hz for an 8-pole induction motor. If the rotor frequency is 2.5 hz, calculate the slip and the actual speed of rotor.	Understand	5
2	An 8 pole, 3phase alternator is coupled to a prime mover running at 750 rpm. It supplies an induction motor which has a full load speed of 960 rpm. Find the number of poles of IM and slip.	Apply	8
3	In case of an 8-pole induction motor the supply frequency was 50 Hz and the shaft speed was 735 rpm. Compute (i) Synchronous speed (ii) Slip speed per unit slip (iii) Percentage slip.	Apply	8
4	A 3- φ induction motor is wound for 4 poles and is supplied from 50Hz system. Calculate i) Synchronous speed ii) Rotor speed, when slip is 4% iii) Rotor frequency when rotor runs at 60 rpm.	Remember	8
5	The emf in the stator of an 8 pole induction motor has a frequency of 50 Hz and that in the rotor is 1.5Hz. At what speed the motor is running and what is the slip?	Creating	8
6	An 8-pole, 50 Hz, 3 phase slip ring IM has effective resistance of 0.08 /phase. The speed correspond to maximum torque is 650 rpm. What is the value of resistance to be inserted in rotor circuit to obtain maximum torque at starting?	remember	8
7	A 4 pole, 400 V, 3phase IM has a EMF of 100 V per standstill r t phase. The rotor has resistance of 50 Ω/ph and standstill reactance of 0.5 Ω/ph. Calculate the maximum torque & slip at hic h it occurs. Neglect stator impedance.	remember	8
8	The power input to a 500V, 50Hz, 6-pole, 3-phase induction motor running at 975 rpm is 40 KW. The stator losses are 1KW and the friction and wind age losses total to 2KW, Calculate i) The slip ii) Rotor copper loss iii) Shaft power.	remember	8
9	An 8 pole, 3 phase alternator is coupled to an engine running at 750 rpm. The alternator supplies power to an induction motor which has a full load speed of 1425 rpm. Find the percentage slip and the number of poles of the motor	remember	8
10	500HP, 30, 440V, 50Hz induction motor has a speed of 950 rpm on full load. The machine has 6 poles. Calculate a. Slip and Speed of rotor field w.r.t rotor. b. Speed of rotor field w.r.t stator	apply	8

c. Complete alternations of rotor voltage per minute.
d. Relative speed between stator field w.r.t rotors.

1	A cage IM when started by means of a star-Delta starter takes 180 % of full load current & develops 35 % of full load torque at starting. Calculate the starting current & torque in terms of full load torque when started by means of an auto transformer with 75 % tapping.	creating	8
2	A 3-phase, 400V induction motor has the following test readings:-No-load:- 400V, 1250W, 9 A Short circuit:- 150V, 4KW,38 A	Remember	8

	Draw the circle diagram. If the normal rating is 14.9 KW, find from the circle diagram, the full load value of current, power factor and slip.		
3	A 4 pole, 50 Hz, wound rotor IM has a rotor resistance of 0.56 ph and runs at 1430 rpm at full load. Calculate the additional resistance per phase to be inserted in the rotor circuit to lower the speed to 1200 rpm, if the torque remains constant.	Remember	8
4	Two 50Hz, 3 phase induction motors having six and four poles respectively are cumulatively cascaded, the 6 pole motor being connected to the main supply. Determine the frequencies of the rotor currents and the slips refereed to each stator field if the set has a slip of 2%.	Remember	8
5	A 3 phase, 6 pole 50Hz induction motor when fully loaded, runs with a slip of 3%. Find the value of resistance necessary in series per phase of the rotor to reduce the speed by 10%. Assume that the resistance of the rotor per phase is 0.2 ohm.	apply	8
6	Two slip ring IMs having 10 & 6 poles respectively are mechanically coupled. (i) Calculate the possible speed when first motor is supplied from a 50 Hz supply line. (ii)Calculate the ratio of power shared by the two motors. (iii) If the smallest possible speed is to be attained independently by each machine, calculate the frequency of the voltage to be injected in the rotor circuit.	Reme ber	8
7	A 6 pole, 50 Hz, 3 phase induction motor is running at 3 percent slip when delivering full load torque. It has standstill rotor resistance of 0.2 ohm and reactance of 0.4 ohm per phase. Calculate the speed of the m tor if an additional resistance of 0.6 ohm per phase is inserted in the r t r circuit. The full load torque remains constant.	Apply	8
8	Two 50 Hz, 3 phase Induction motors having six and four poles respectively are cumulatively cascaded, the 6 pole motor being connected to the main supply. Determine the frequency of the rotor cur ents and the slips referred to each stator field if the set has a slip of 2%.	Evaluate	8
9	A 50 KVA, 400V, 3 phase, 50 Hz squirrel cage Induction motor has full load slip of 5%. Its standstill impedance is 0.866 ohms per phase. It is started using a tapped auto transformer. If the maximum allowable supply current at the time of starting is 100A, calcula e he tap position and the ratio of starting torque to full load.	Understand	8
10	A three-phase delta-connected cage type induction, motor when connected directly to a 400 V, 50Hz supply, takes a starting current of 100 A, in each stator phase. Calculate i) The line current for `direct--on-line' starting. ii) Line and phase starting currents for star-delta starting	Apply	8

HOLY MARY INSTITUTE OF TECHNOLOGY & SCIENCE
Bogaram(V),Keesara(M),Medchal Dist - 501301

Dept.of Electrical & Electronics Engineering

Sub:Basic Electrical Engineering **Class:I CSE –I SEM**

A.Y:2018-19

ASSIGNMENT- 1

Answer the following questions

1. State and explain Kirchoff's laws for magnetic circuits
2. State the Faraday's laws of electromagnetism.
3. State and explain Norton's theorem.
4. Discuss a) Insulators
   b) Conductors
   c) Semiconductors with suitable examples.
5. What are the expressions for maximum current in the case of RL and RC circuits?
6. How do you draw the voltage locus for RL,RC series circuits:
7. Distinguish between AC and DC sources giving their waveforms with respect to time?
8. State and Explain Ohm's law?

HOLY MARY INSTITUTE OF TECHNOLOGY & SCIENCE
Bogaram(V),Keesara(M),Medchal Dist - 501301

Dept.of Electrical & Electronics Engineering

Sub:Basic Electrical Engineering **Class:I CSE –I SEM**

A.Y:2018-19

ASSIGNMENT- 2

Answer the following questions

1. Define a) Active & Passive elementsb) Linear & Non linear elements c) Unilateral & Bilateral elements
2. Can DC supply be used for a Transformer? Explain?
3. Discuss in detail the difference between a core type & shell type Transformer.
4. Explain the procedure for Oc & Sc test for predetermination of efficiency in single phase transformer.
5. Explain the principle of operation of a dc motor. Derive the torque equation?
6. Give the concept of back-emf in dc motor.
7. Derive an expression for the speed of a dc motor in terms of back emf and flux per pole.
8. Why a dc series motor cannot be started on no load. Explain?
9. Explain the various losses taking place in dc machines. With the help of these losses draw the Power flow diagram for a dc motor.
10. Give applications of dc motors.
11. What are the main parts of a dc machine? State the function of each part with figures and Derive induced emf of dc generator.
12. State the difference between dc motor and dc generator?
13. What is the principle of 3 phase induction motor and why it is called a rotating transformer? Justify.
14. What is Slip and how it is related to rotor frequency in induction motor.
15. Discuss the classification of electrical instruments?
16. Explain the significance of controlling torque and damping torque relevant to the operation

of indicating instruments.
17. Difference between moving iron & moving coil instruments?
18. What do you understand by attractive type and repulsion type instruments? Explain.
19. Explain the errors occurring in a moving iron instruments.
20. List out the advantages and disadvantages of MI and MC instruments.

HOLY MARY INSTITUTE OF TECHNOLOGY & SCIENCE

Bogaram(V),Keesara(M),Medchal Dist - 501301

Dept.of Electrical & Electronics Engineering

Sub:Basic Electrical Engineering **Class:I CSE –I SEM**

A.Y:2018-19

TUTORIAL-1

Answer the following questions

1. Define
   a) Active & Passive elements
   b) Linear & Non linear elements
   c) Unilateral & Bilateral elements
2. For the circuit as shown in figure, calculate the current in the various branches and the power delivered and consumed.

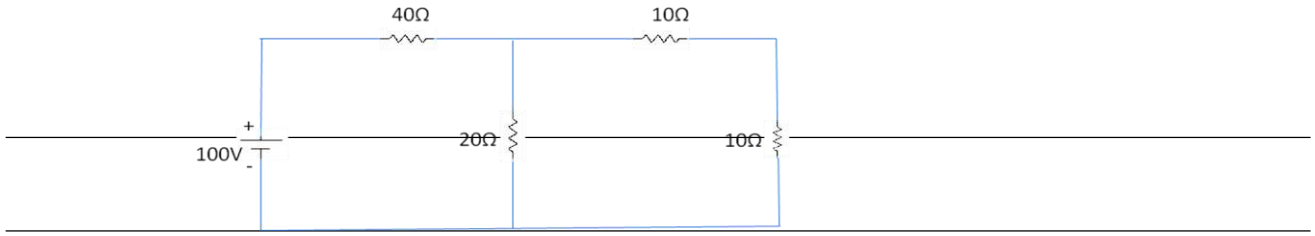

3. Calculate the equivalent delta-connected resistances values for the following star-connected resistances.

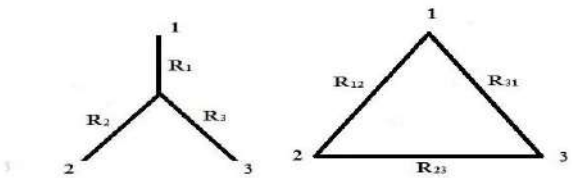

4. Explain the principle of working of a single phase transformer.
5. Give in detail the operating principle of a 3 phase induction motor.
6. Explain the following with reference to the indicating instruments,
   a) Deflecting torque
   b) Controlling torque
   c) Damping torque
   d) Scale and pointer

7. Discuss in detail the difference between a core type & shell type Transformer.
8. Explain the procedure for Oc & Sc test for predetermination of efficiency in single phase transformer.

HAND BOOK OF IBTECH ENGLISH

BY M.ETHEL SANGEETHA

(ENGLISH FACULTY)

HOLY MARY INSTITUTE OF TECHNOLOGY & SCIENCE

Bogaram (V), Keesara (M), Medchal (D). 501301
www.hits.ac.in Email: principalhitscoe@hmgi.ac.in

SUBJECT :- ENGLISH

1. **Objectives and Relevance**
2. **Scope**
3. **Prerequisites**
4. **Syllabus**
5. **Suggested Books**
6. **Unit-wise Planner**
7. **Session Plan**
8. **Websites**
9. **Journals**
10. **Question Bank:-**

    i. **JNTU**

    ii. **GATE**

    iii. **IES**

OBJECTIVES AND RELEVANCE

English is a foreign language for engineers should improve their language skills in English. In the view growing importance of English as a tool for global communication and the consequent emphasis on training students to acquire language skills, the course of English has been designed to develop linguistic, communicative and critical thinking competences of Engineering students

In English the focus should be on the skills deve4lopment in the areas of vocabulary, grammar, r4eading and writing, for this, the time should be utilized for working out the exercises given after each excerpt, and also for supplementing the exercises with authentic materials of a similar kind. For example, news paper articles, advertisements, promotional materials.

The language lab focuses on the production and practice of sound of language and familiarizes the students with the use of English in everyday situations both in formal and informal contexts.

SCOPE

English has occupied an important place in our educational system and life of our country. It is the language that continues to dominate the world. It is generally every language has minimum many components such as vocabulary, patterns of sentences, grammar, descriptive, narrative, expository etc. to use the English language effectively in spoken and written forms, to communicate confidently in various contexts and different cultures, better understanding of nuance of English language through audio-visual experience and group discussion activities.

PREREQUISITES (for English Language)

I. Words, Sentence, Paragraphs
II. Grammar in Usage
III. Even suffixes and prefixes
IV. Communication skills
V. LSRW Skills
VI. Seminars in the class rooms
VII. Group discussion (JAM Sessions)

Basic Writing Skills: Sentence Structures -Use of Phrases and Clauses in Sentences-Importance of Proper Punctuation- Techniques for writing precisely – **Paragraph writing** – Types, Structures and Features of a Paragraph - Creating Coherence-Organizing Principles of Paragraphs in Documents.

UNIT –II

'Ancient Architecture in India' from the prescribed textbook 'English for Engineers' published by Cambridge University Press.

Vocabulary: Synonyms and Antonyms.

Grammar: Identifying Common Errors in Writing with Reference to Noun-pronoun Agreement and Subject-verb Agreement.

Reading: Improving Comprehension Skills – Techniques for Good Comprehension

Writing: Format of a Formal Letter-**Writing Formal Letters** E.g.., Letter of Complaint, Letter of Requisition, Job Application with Resume.

UNIT –III

'Blue Jeans' from the prescribed textbook 'English for Engineers' published by Cambridge University Press.

Vocabulary: Acquaintance with Prefixes and Suffixes from Foreign Languages in English to form Derivatives-Words from Foreign Languages and their Use in English.

Grammar: Identifying Common Errors in Writing with Reference to Misplaced Modifiers and Tenses.

Reading: Sub-skills of Reading- Skimming and Scanning

Writing: Nature and Style of Sensible Writing- **Defining- Describing** Objects, Places and Events – **Classifying-** Providing Examples or Evidence

UNIT –IV

'What Should You Be Eating' from the prescribed textbook 'English for Engineers' published by Cambridge University Press.

Vocabulary: Standard Abbreviations in English

Grammar: Redundancies and Clichés in Oral and Written Communication.

Reading: Comprehension- Intensive Reading and Extensive Reading

Writing: Writing Practices--Writing Introduction and Conclusion - Essay Writing-Précis Writing.

UNIT –V

'How a Chinese Billionaire Built Her Fortune' from the prescribed textbook 'English for Engineers' published by Cambridge University Press.

Vocabulary: Technical Vocabulary and their usage

Grammar: Common Errors in English

Reading: Reading Comprehension-Exercises for Practice

Writing: **Technical Reports**- Introduction – Characteristics of a Report – Categories of Reports

Formats- Structure of Reports (Manuscript Format) -Types of Reports - Writing aReport.

Prescribed Textbook:

1. **Sudarshana, N.P. and Savitha, C. (2018). English for Engineers. Cambridge University Press.**

References:

1. Swan, M. (2016). Practical English Usage. Oxford University Press.
2. Kumar, S and Lata, P.(2018). Communication Skills. Oxford University Press.
3. Wood, F.T. (2007).Remedial English Grammar. Macmillan.
4. Zinsser, William. (2001). On Writing Well. Harper Resource Book.
5. Hamp-Lyons, L. (2006).Study Writing. Cambridge University Press.
6. Exercises in Spoken English. Parts I –III. CIEFL, Hyderabad. Oxford University Press.

SUGGESTED BOOKS

1.	Sudharshana, N.P. and Savitha, C. (2018). English for Engineers. Cambridge University Press.
2.	Swan, M. (2016). Practical English Usage. Oxford University Press.
3.	Wood, F.T.(2007). Remedial English Grammar. Macmillian.
4.	Zinsser, William (2001). On Writing Well. Harper Resource Book.
5.	Exercises in Spoken English. Parts I –III. CIEFL, Hyderabad, Oxford University Press.

UNIT-WISE PLANNER

Unit	Details	No. of Classes	Total Classes
I.	The Raman Effect	2	11
	Vocabulary: Word Formation -The use of Prefixes & Suffixes. Exercises for practice.	2	
	Grammar: Identifying Common Errors in Articles and Prepositions.	2	
	Reading: Reading and its importance, techniques of Effective Reading.	2	
	Writing: Sentence Structures, Phrases and Clauses, Punctuation, Techniques for writing precisely, Paragragh Writing, Organizing Principles of Paragraphs in Documents.	3	
II.	Ancient Architecture In India	2	
	Vocabulary: synonyms and Antonyms.	2	

	<u>Grammar:</u> Common Errors in Noun-Pronoun Agreement and Subject-Verb Agreement.	**2**	10
	<u>Reading:</u> Improving Comprehension Skills, Techniques for Good Comprehension.	**2**	
	<u>Writing:</u> Formal Letter, Letter of Complaint, Requisition Letter, Job Application and Resume.	**2**	
III	**Blue Jeans**	**2**	9
	<u>Vocabulary:</u> Prefixes And Suffixes From Foreign Languages, Words from Foreign Languages.	**2**	
	<u>Grammar</u>: Misplaced Modifiers, Tenses.	**3**	
	<u>Reading:</u> Skimming and Scanning.	**1**	
	<u>Writing:</u> Nature And Style Of Sensible Writing, Defining Describing (Objects, Places, Events), Classifying, Providing Examples And Evidence.	**1**	
IV	**What Should You Be Eating ?**	**2**	9
	<u>Vocabulary:</u> Abbreviations and Acronyms.	**1**	
	Grammar: Redundancies and Cliches.	**2**	
	Reading: Comprehension, Intensive and Extensive Reading.	**2**	

	Writing: Essay Writing, Writing Introduction and Conclusion, Precis Writing.	**2**	
V	**How A Chinese Billionaire Built Her Fortune**	**2**	8
	Vocabulary: Technical Vocabulary.	**1**	
	Grammar: Practice Exercises in Common Errors .	**2**	
	Reading: Practice in Reading Comprehension.	**1**	
	Writing: Report Writing, Types of Reports, Business and Technical Reports.	**2**	
	Total No. of Classes	**47**	

* * * *

SESSION –WISE PLANNER

Unit	Details	bb/ppt	No. of Classes	Total Classes
I.	The Raman Effect	bb	2	16
	SEMINAR	PPT	1	
	Vocabulary: Word Formation, Use of Prefixes and Suffixes.	bb	2	
	Grammar: Identifying Common Errors In Articles and Prepositions.	bb	2	
	TUTORIAL	bb	2	
	Reading: Reading and its Importance, Techniques of Effective Reading.	bb	2	
	REMEDIAL	bb	2	

	Writing: Sentence Structures , Phrases and Clauses, Punctuation, Techniques For Writing Precisely, Paragraph Writing, Organising Principles Of Paragraphs In Documents.	**bb**	**3**	
II.	**Ancient Architecture In India**	**bb**	**2**	14
	SEMINAR	**PPT**	**1**	
	Vocabulary: Synonyms, antonyms.	**bb**	**2**	
	TUTORIAL	**bb**	**2**	
	Grammar: Common Errors inNoun-Pronoun Agreement and Subject-Verb Agreement.	**bb**	**2**	
	REMEDIAL	**bb**	**2**	
	Reading: Improving Comprehension Skills,Techniques for Good Comprehension.	**bb**	**1**	
	Writing:Formal Letters, Letter of Complaint ,Requisition Letter, Job Application And Resume.	**bb**	**2**	
III	**Blue Jeans.**	**bb**	**2**	15
	SEMINAR	**PPT**	**1**	
	Vocabulary: Prefixes and Suffixes From Foreign Languages, Words from Foreign Languages.	**bb**	**2**	
	TUTORIAL	**bb**	**2**	

	Grammar: Misplaced Modofiers Tenses.	**bb**	**2**	
	Reading: Skimming and Scanning.	**bb**	**1**	
	REMEDIAL	**bb**	**2**	
	Writing: Nature and Style of Sensible Writing, Definning , (Objects, Places ,Events), Classifying, Providing Examples and Evidence.	**bb**	**3**	
IV	**What Should You Be Eating?**	**bb**	**2**	13
	SEMINAR	**PPT**	**1**	
	Vocabulary: Abbreviations and Acronyms.	**bb**	**2**	
	Grammar: Redundancies and Cliches.	**bb**	**2**	
	TUTORIAL	**bb**	**2**	
	Reading: Comprehension , Intensive and Extensive Reading.	**bb**	**1**	
	REMEDIAL	**bb**	**2**	
	Writing: Essay Writing , writing Introduction and conclusion , Precis Writing.	**bb**	**1**	

V	**How A Chinese Billionare Built Her Fortune**	**bb**	**2**	13
	SEMINAR	**PPT**	**1**	
	Vocabulary: Technical Vocabulary	**bb**	**1**	
	Grammar: Practice Exercises In Common Errors.	**bb**	**2**	
	TUTORIAL	**bb**	**2**	
	Reading: Practice in Reading Comprehension.	**bb**	**1**	
	REMEDIAL	**bb**	**2**	
	Writing: Report Writing , Types Of Reports , Business and Technical Reports.	**bb**	**2**	
	Total No. of Classes		**71**	

* * * * *

WEBSITES

INTERNATIONAL

1. www.ef.com/english-resources/english-grammar/pronouns
2. https://dictionary.cambridge.org/grammar/british-grammar/about-words.../
3. www.futurelearn.com
4. en.wikipedia.org
5. www.wyzant.com
6. www.grammar.cl

NATIONAL

1. www.gov.uk
2. assets.publishing.service.gov.uk
3. ndl.iitkgp.ac.in
4. in.ixl.com
5. www.neschool.org
6. www.ox.ac.uk
7. www.masterstudies.com

JOURNALS

INTERNATIONAL

1. International Journal of Humanities and Cultural Studies
2. Research Journal of English Language and Literature (RJELAL)
3. International Journal of ELT, Linguistics and Comparative Literature (IJELC)
4. International Journal of English Language, Literature & Translational Studies (IJELR)
5. International Journal of English Research
6. International Journal of Humanities and Social Science Research
7. The Alliance of Digital Humanities Organizations
8. Julieanne Lamond Australian National University.
9. Intellect Ltd , Bristol United Kingdom

NATIONAL

1. www.languageinindia.com
2. www.indianjournals.com
3. shodhganga.inflibnet.ac.in
4. www.ijiras.com
5. www.ijsr.net
6. www.nationallibrary.gov.in
7. www.library.iitb.ac.in
8. www.vidyasagar.ac.in
9. www.ugc.ac.in

QUESTION BANK

UNIT : 1 The Raman Effect.

1. Why was Raman awarded the Nobel Prize?
2. Explain Ramans Sea Voyage to London ?
3. According to Raman, why is the Sea Blue in Colour ?
4. What is Raman Spectroscopy ?

UNIT : II Ancient Architecture In India.

1. ”The Lion capital of the Samath Pillar” – What does ‘Capital’ mean here ?
2. What is a ‘ Stupa’ ?
3. What is a Jataka Story ?
4. How did the Gandhara style emerge ?
5. What are the Characteristics of the Gandhara Style ?
6. Name two other Indigenous styles of Architecture ?
7. Name some places known for their Cave Architecture ?
8. What are Rock-Cut Temples ? Name some Famous Rock-cut Temples ?
9. Name some of the Major Dynasties of South India ?
10. What are the differences between the Dravida Style and the Nagara Style ?

UNIT: III BLUE JEANS.

1. What were the steps Denim went through before being used as Pants ?
2. List out the Evolution of Blue Jeans discussed in Paragraphs 2 and 3 ?
3. What are the steps in Manufacturing the Denim Fabric ?
4. What is Carding ?
5. How is Denim dyed?
6. What is Slashing ? Why is it done ?
7. What is Sanfrising? Why is it done ?

UNIT : IV WHAT SHOULD YOU BE EATING ?

1. What are the Two main Factors that change your Body Weight ?
2. What is the Connection between Whole Grains and Insulin ?
3. How are potatoes different from other Vegetables ?
4. What do you know about Omega-3 ?
5. Why should Dairy Products be consumed in Moderation ?
6. Do you know of other Sources of vitamin-D than the Ones listed here ?
7. What happens in the body when you consume Sugary Drinks ?
8. List Foods that contain High Amounts of Sodium ?

UNIT : V HOW A CHINESE BILLIONAIRE BUILT HER FORTUNE.

1. Who is the World's Richest self-made Woman ? What is the name of the Company she started ?

2. Where is she ‘most at home’? What does it mean to be ‘most at home’?

3. Where was she Born? What was her Childhood like ?

4. What does Lens Technology produce? Who are its Biggest Customers ?

5. Why do you think Motorola approached Lens Technology and not any other lens maker ?

6. What are the Processes that Glass is put through in the Factory ?

7. What are the Factors that helped make Ms Zhou successful ?

* * * * *

DESCRIPTIVE AND ASSIGNMENT QUESTIONS

1. Why was Raman awarded the Nobel Prize ?

2. According to Raman why is the Sea Blue in Colour ?

3. Name two other Indigenous styles of Architecture ?

4. What is a 'stupa' ?

5. What are the differences between the Dravida style and the Nagara style ?

6. What were the steps Denim went through before being used as Pants?

7. What is sanforising ? why is it done?

8. What do you know about Omega ?

9. Do you know of other sources of Vitamin D than the Ones listed here?

10. List out foods that contain high amounts of Sodium ?

11. Who is the World's richest self-made Woman? What is the name of the Company she started ?

12. What does Lens technology Produce? who are its biggest Customers ?

13. What are the factors that helped make Ms. Zhou Successful ?

* * * * *

HOLY MARY INSTITUTE OF TECHNOLOGY & SCIENCE
Bogaram (V), Keesara (M), Medchal (D). 501301
www.hits.ac.in Email: principalhitscoe@hmgi.ac.in

HAND BOOK

Subject : Engineering Physics

Academic Year : 2018-2019

Department:- SCIENCE & HUMANITIES

Year :- I-B.Tech (I-Sem)

HOLY MARY INSTITUTE OF TECHNOLOGY & SCIENCE

Bogaram (V), Keesara (M), Medchal (D). 501301
www.hits.ac.in Email: principalhitscoe@hmgi.ac.in

SUBJECT :- Engineering Physics

1. Objectives and Relevance
2. Scope
3. Prerequisites
4. Syllabus
5. Suggested Books
6. Unit-wise Planner
7. Session Plan
8. Question Bank
9. Objective Questions
10. Assignment Questions
11. Tutorial Topics

OBJECTIVES AND RELEVANCE

Physics is a science that helps us to utilise all natural resources and energy for our comforts. It helps us to learn how we can utilise the power of air to make a wind mile. Water power can be used to make hydro energy. Steam power can be used for making a steam engine. It is physics that teaches us that energy can be transferred and converted. So, physics is a study of several laws of nature and the application of those laws in our real life to make it more comfortable.

Engineering deals with all applications of physics. Everything that we use in our daily life is directly or indirectly influenced by physics and its application. Starting from the news paper on our tea table in morning time, our phone, car, computer, light, fan, air-condition, television even our house all are the application of physics. So we can say evidently, that physics is fundamental of all engineering.

SCOPE

Physics not only helps us understand the fundamentals of nature but also helps us appreciate the beauty of nature. Many of the beautiful natural phenomena like rainbows, the northern lights, shooting stars, and comets can be better appreciated if we know the concepts behind them. If you are a kind of person who gets fascinated with learning how nature works, but at the same time, interested in applying those concepts yourself, then a B.Tech in Engineering Physics is the place for you.

PREREQUISITES

1. Vectors and Scalars
2. Newton's Laws of Motion
3. Waves in strings
4. Interference and diffraction.
5. Different phenomenon in optics.

SYLLABUS

JAWAHARLAL NEHRU TECHNOLOGICAL UNIVERSITY HYDERABAD B.Tech. 1st Year Syllabus (w.e.f AY 2018- 19) Common for Civil, ME, AE, ME (M), MME, Mining & Petroleum Engg.

I YEAR I SEMESTER

S. No.	Course Code	Course Title	L	T	P	Credits
1	MA101BS	Mathematics – I	3	1	0	4
2	PH102BS	Engineering Physics	3	1	0	4
3	CS103ES	Programming for Problem Solving	3	1	0	4
4	ME104ES	Engineering Graphics	1	0	4	3
5	PH105BS	Engineering Physics Lab	0	0	3	1.5
6	CS106ES	Programming for Problem Solving Lab	0	0	3	1.5
7	*MC109ES	Environmental Science	3	0	0	0
		Induction Programme				
		Total Credits	13	3	10	18

I YEAR II SEMESTER

S. No.	Course Code	Course Title	L	T	P	Credits
1	MA201BS	Mathematics - II	3	1	0	4
2	CH202BS	Chemistry	3	1	0	4
3	ME203ES	Engineering Mechanics	3	1	0	4
4	ME205ES	Engineering Workshop	1	0	3	2.5
5	EN205HS	English	2	0	0	2

6	CH206BS	Engineering Chemistry Lab	0	0	3	1.5
7	EN207HS	English Language and Communication Skills Lab	0	0	2	1
		Total Credits	12	3	8	19.0

*MC – Satisfied/Unsatisfied

PH102BS: ENGINEERING PHYSICS

Course Objectives:

- The course aims at making students to understand the basic concepts of Principles of Physics in a broader sense with a view to lay foundation for the various engineering courses.

- Students will be able to demonstrate competency and understanding of the concepts found in Mechanics, Harmonic Oscillations, Waves in one dimension, wave Optics, Lasers, Fiber Optics and a broad base of knowledge in physics.

- The main purpose of this course is to equip engineering undergraduates with an understanding of the scientific method, so that they may use the training beneficially in their higher pursuits.

- Today the need is to stress principles rather than specific procedures, to select areas of contemporary interest rather than of past interest, and to condition the student to the atmosphere of change he will encounter during his carrier.

Course outcomes: Upon graduation, the graduates will have:

- The knowledge of Physics relevant to engineering is critical for converting ideas into technology.
- An understanding of Physics also helps engineers understand the working and limitations of existing devices and techniques, which eventually leads to new innovations and improvements.

- In the present course, the students can gain knowledge on the mechanism of physical bodies upon the action of forces on them, the generation, transmission and the detection of the waves, Optical Phenomena like Interference, diffraction, the principles of lasers and Fibre Optics.

- Various chapters establish a strong foundation on the different kinds of characters of several materials and pave a way for them to use in at various technical and engineering applications.

UNIT-I: INTRODUCTION TO MECHANICS

Transformation of scalars and vectors under Rotation transformation, Forces in Nature, Newton's laws and its completeness in describing particle motion, Form invariance of Newton's second law, Solving Newton's equations of motion in polar coordinates, Problems including constraints and friction, Extension to cylindrical and spherical coordinates.

UNIT-II: HARMONIC OSCILLATIONS

Mechanical and electrical simple harmonic oscillators, Complex number notation and phasor representation of simple harmonic motion, Damped harmonic oscillator: heavy, critical and light damping, Energy decay in a damped harmonic oscillator, Quality factor, Mechanical and electrical oscillators, Mechanical and electrical impedance, Steady state motion of forced damped harmonic oscillator, Power observed by oscillator.

UNIT-III: WAVES IN ONE DIMENSION

Transverse wave on a string , The wave equation on a string , Harmonic waves, Reflection and transmission of waves at a boundary, Impedance matching , Standing waves and their Eigen frequencies , Longitudinal waves and the wave equations for them, Acoustic waves and speed of sound, Standing sound waves.

UNIT-IV: WAVE OPTICS

Huygen's principle, Superposition of waves and interference of light by wave front splitting and amplitude splitting, Young's double slit experiment, Newton's rings, Michelson's interferometer, Mach-Zehnder interferometer, Frunhofer diffraction from a single slit and circular aperture, Diffraction grating- resolving power.

UNIT-V: LASERS AND FIBRE OPTICS

Lasers: Introduction to interaction of radiation with matter, Coherence, Principle and working

of Laser, Population inversion, Pumping, Types of Lasers: Ruby laser, Carbon dioxide (CO_2)

laser, He-Ne laser, Applications of laser. Fibre Optics: Introduction, Optical fibre as a dielectric wave guide, Total internal reflection, Acceptance angle, Acceptance cone and Numerical aperture, Step and Graded index fibres, Losses associated with optical fibres, Applications of optical fibres.

TEXT BOOKS:

Engineering Mechanics, 2nd ed.- MK Harbola, Cengage Learning

I. G. Main, “Vibrations and waves in physics’, 3rd Edn, Cambridge University Press, 2018.

Ajoy Ghatak, “ Optics”, McGraw Hill Education, 2012

REFERENCES:

H. J. Pain, “The physics of vibrations and waves”, Wiley, 2006

O. Svelto, “Principles of Lasers”

“Introduction to Mechanics”, M.K.Verma, Universities Press

UNITWISE PLANNER

Sub: **(**PH102BS) ENGINEERING PHYSICS A:Y: 2018-2019

	DETAILS	HOURS
I	**Introduction to Mechanics*:*** Transformation of scalars and vectors under Rotation transformation, Forces in Nature, Newton’s laws and its completeness in describing particle motion, Form invariance of Newton’s second law, Solving Newton’s equations of motion in polar coordinates, Problems including constraints and friction, Extension to cylindrical and spherical coordinates.	12
II	**Harmonic Oscillations*:*** Mechanical and electrical simple harmonic oscillators, Complex number notation and phasor representation of simple harmonic motion, Damped harmonic oscillator: heavy, critical and light damping, Energy decay in a damped harmonic oscillator, Quality factor, Mechanical and electrical oscillators, Mechanical and electrical impedance, Steady state motion of forced damped harmonic oscillator, Power observed by oscillator.	10
III	**Waves in one dimension*:*** Transverse wave on a string , The wave equation on a string , Harmonic waves, Reflection and transmission of waves at a boundary, Impedance matching , Standing waves and their Eigen frequencies , Longitudinal waves and the wave equations for them, Acoustic waves and speed of sound, Standing sound waves.	10

IV	**Wave Optics*:*** Huygen's principle, Superposition of waves and interference of light by wave front splitting and amplitude splitting, Young's double slit experiment, Newton's rings, Michelson's interferometer, Mach-Zehnder interferometer, Frunhofer diffraction from a single slit and circular aperture, Diffraction grating- resolving power.	12
V	**Lasers and Fibre Optics*:*** Lasers: Introduction to interaction of radiation with matter, Coherence, Principle and working of Laser, Population inversion, Pumping, Types of Lasers: Ruby laser, Carbon dioxide (CO_2) laser, He-Ne laser, Applications of laser. Fibre Optics: Introduction, Optical fibre as a dielectric wave guide, Total internal reflection, Acceptance angle, Acceptance cone and Numerical aperture, Step and Graded index fibres, Losses associated with optical fibres, Applications of optical fibres.	12
	TOTAL HOURS	56

SESSION PLANNER

S.no	Unit no	Topic	Week	No of sessions planned	Mode of teaching BB/PPT/OHP/MM	Reference *	Remarks
	I	**Introduction to Mechanics**					
1		Introduction to mechanics	4/7	1	BB	A1,A6,w1	
2		Basics of Newtonian mechanic	4/7	1	BB	A1,A6,w1	
3		Transformation of scalars under Rotation transformation	1/8	1	BB	A1,A6,w1	
4		Transformation of vectors under Rotation transformation	1/8	1	BB	A1,A6,w1	
5		Forces in Nature	1/8	1	BB	A1,A6,w1	
6		Newton's laws	2/8	1	BB	A1,A6,w1	
7		Completeness of Newton's laws in describing particle motion	2/8	1	BB/PPT	A1,A6,w1	
8		Form invariance of Newton's second law,	2/8	1	BB/PPT	A1,A6,w1	

9		Solving Newton's equations of motion in polar coordinates	3/8	1	BB	A1,A6,w1	
10		Problems including constraints and friction	3/8	1	BB	A1,A6,w1	
11		Extension to cylindrical coordinates.	3/8	1	BB	A1,A6,w1	
12		Extension to spherical coordinates.	4/8	1	BB	A1,A6,w1	
	II	**Harmonic Oscillations**					
13		Mechanical simple harmonic oscillators	4/8	1	BB	A1, A2,A4,W1	
14		Electrical simple harmonic oscillators	4/8	1	BB	A1, A2,A4,W1	
15		Complex number notation of simple harmonic oscillator	5/8	1	BB	A1, A2,A4,W1	
16		Phasor representation of simple harmonic motion,	5/8	1	BB	A1, A2,A4,W1	
17		Damped harmonic oscillator: heavy, critical and light damping	1/9	1	BB	A1, A2,A4,W1	
18		Energy decay in a damped harmonic oscillator	1/9	1	BB	A1, A2,A4,W1	
19		Quality factor, Mechanical and electrical oscillators,	1/9	1	BB/PPT	A1, A2,A4,W1	
20		Mechanical and electrical impedance,	2/9	1	BB/PPT	A1, A2,A4,W1	
21		Steady state motion of forced damped harmonic oscillator	2/9	1	BB/PPT	A1, A2,A4,W1	
22		Power observed by oscillator.	2/9	1	BB/learning by doing	A1, A2,A4,W1	
	III	**Waves in one dimension:**					
23		Transverse wave on a string	3/9	1	BB	A2,A4,W1	
24		The wave equation on a string	3/9	1	BB	A2,A4,W1	
25		Harmonic waves	3/9	1	BB	A2,A4,W1	
26		Reflection and transmission of waves at a boundary	4/9	1	BB	A2,A4,W1	
27		Impedance matching ,	4/9	1	BB	A2,A4,W1	
28		Standing waves and their Eigen frequencies	4/9	1	BB	A2,A4,W1	
29		Longitudinal waves and the wave equations for them	5/9	1	BB	A2,A4,W1	
30		Acoustic waves	5/9	1	BB	A2,A4,W1	

31		Speed of sound,	5/9	1	BB	A2,A4,W1	
32		Standing sound waves	1/10	1	BB	A2,A4,W1	
	IV	**Wave Optics**					
33		Huygen's principle	1/10	1	BB	A3,W1	
34		Superposition of waves	1/10	1	BB/PPT	A3,W1	
35		interference of light by wave front splitting	2/10	1	BB/PPT	A3,W1	
36		interference of light by amplitude splitting	2/10	1	BB/PPT	A3,W1	
37		Young's double slit experiment	2/10	1	BB/PPT	A3,W1	
38		Newton's rings,	3/10	1	BB/PPT	A3,W1	
39		Michelson's interferometer	3/10	1	BB/PPT	A3,W1	
40		Mach-Zehnder interferometer	3/10	1	BB/PPT	A3,W1	
41		Frunhofer diffraction from a single slit and circular aperture	4/10	1	BB/PPT	A3,W1	
42		Frunhofer diffraction from a circular aperture	4/10	1	BB/PPT	A3,W1	
43		Diffraction grating	4/10	1	BB/PPT	A3,W1	
44		Resolving power	5/10	1	BB	A3,W1	
	V	**Lasers and Fibre Optics**					
45		Lasers: Introduction to interaction of radiation with matter	1/11	1	BB/PPT	A3,A5,W1	
46		Coherence, Principle and working of Laser	1/11	1	BB/PPT	A3,A5,W1	
47		Population inversion, Pumping	1/11	1	BB/PPT	A3,A5,W1	
48		Types of Lasers: Ruby laser	2/11	1	BB/PPT	A3,A5,W1	
49		Carbon dioxide (CO_2) laser	2/11	1	BB/PPT	A3,A5,W1	
50		He-Ne laser	2/11	1	BB/PPT	A3,A5,W1	
51		Applications of laser	3/11	1	BB/PPT	A3,A5,W1	
52		Total internal reflection Acceptance angle	3/11	1	BB/PPT	A3,A5,W1	
53		Acceptance cone and Numerical aperture	3/11	1	BB/PPT	A3,A5,W1	
54		Step and Graded index fibres	4/11	1	BB/PPT	A3,A5,W1	
55		Losses associated with optical fibres	4/11	1	BB/PPT	A3,A5,W1	
56		Applications of optical fibres	4/11	1	BB/PPT	A3,A5,W1	

*

Text Books

A1: Engineering Mechanics, 2nd ed.- MK Harbola, Cengage Learning

A2: I. G. Main, "Vibrations and waves in physics', 3rd Edn, Cambridge University Press, 2018.

A3: Ajoy Ghatak, " Optics", McGraw Hill Education, 2012

Reference Books

A4: H. J. Pain, "The physics of vibrations and waves", Wiley, 2006

A5: O. Svelto, "Principles of Lasers"

A6: Introduction to Mechanics", M.K.Verma, Universities Press

Web Reference

w1: http://nptel.ac.in/courses/Webcourse-contents/IIT-%20Guwahati/engg_physics

X. QUESTION BANK: (JNTUH)

Definitions of the different levels of cognitive skills in Bloom's taxonomy marked in descriptive questions (where the highest level in question bits is only marked) are as follows:

BLOOMS LEVEL	COGNITIVE SKILL	DEFINITION
Level–1 (L1) :REMEMBER	Knowledge	Recalling/Retrieving relevant terminology, specific facts, or different procedures related to information and/or course topics. (At this level, student remembers something, but may not really understand it fully.)
Level–2 (L2) :UNDERSTAND	Comprehension	Determining the meaning of instructional messages (facts, definitions, concepts, graphics etc.)
Level–3 (L3) : APPLY	Application	Carrying out or use previously learned information in another familiar situations or in problem solving
Level–4 (L4) :ANALYZE	Analysis	Breaking information into its constituent parts and detecting how the parts relate to one another and to an overall structure or purpose. Analysis refers to the process of examining information in order to make conclusions regarding cause and effect, interpreting motives, making inferences, or finding evidence to support statements/arguments
Level–5 (L5) :EVALUATE	Evaluation	Making judgment's based on criteria and standards, personal values or opinions
Level–6 (L6) : CREATE	Synthesis	Create or uniquely apply prior knowledge and/or skills to form a novel, coherent whole or original product or produce new and original thoughts, ideas, processes,...

Question Bank for Engineering Physics

DESCRIPTIVE QUESTIONS: (WITH BLOOMS PHRASES)

UNIT I Introduction to Mechanics

Short Answer Questions-

1. Define scalars and vectors.
2. What is rotation transformation?
3. Write a note on completeness of Newton's laws in describing motion of a particle.
4. State Newton's second law of motion.
5. Explain the types of friction with examples?
6. Define the following: (i) Angle of Repose (ii) Coefficient of frictions (iii) Angle of Friction.
7. What are the effects of friction? State the laws of solid friction.
8. Differentiate between static and dynamic friction?

Long Answer Questions-

1. Show that Newton's laws of motion are invariant.
2. Derive Newton's laws of motion in polar coordinates.
3. Explain the use of spherical coordinates in describing the motion of a particle.
4. Write the equations of equilibrium when the body is in space.
5. Derive the least inclined force required to drag body resting on a horizontal plane in terms of weight of the body, angle of the inclined force and angle of friction.
6. A body weighing 50N is just pulled upon inclined plane of 30°by a force of 40 N applied at 30° above the plane. Find the coefficient of friction.
7. What is angle of repose? Prove that angle of repose is equal to the angle of friction.
8. A block lying over a 10° wedge on a horizontal floor and leaning against a vertical wall and weighing 1500 N is to be raised by applying horizontal force to the wedge. Assume the coefficient of friction between all the surfaces in contact to be 0.3. Determine the minimum horizontal force to be applied to raise the block.

UNIT II Harmonic Oscillations

Short Answer Questions-

1. What are the characteristics of a simple harmonic wave?
2. Write a note on damped harmonic oscillator.
3. The time period of a simple pendulum is 1sec. Find the length of the pendulum.
4. A simple harmonic motion is defined by the expression a = -25s, determine its period and frequency.
5. What is resonance? Define quality factor.
6. What is mechanical impedance?

Long Answer Questions-

1. The amplitude of a particle in simple harmonic motion is 0.75m and the periods is 1.2 sec. Find the maximum velocity and maximum acceleration. Find also the displacement, velocity and acceleration after 0.5secs.
2. What is a simple pendulum? Derive an equation for the time period
3. Explain mathematically the effect of variations in g **(**acceleration due to gravity) on the oscillations of a simple pendulum.
4. Deduce a differential equation of a damped harmonic oscillator.
5. Derive the expression for the decay of energy in a damped harmonic oscillator.

UNIT III Waves in one dimension

Short Answer Questions-

1. Define transverse wave.
2. Distinguish between transverse and longitudinal waves.
3. Write a short note on transverse vibrations on strings.
4. What is impedance matching?
5. What are the characteristics of a standing wave?
6. What are acoustic waves?

Long Answer Questions-

1. What are transverse waves derive the expression for the fundamental frequency.
2. Derive the expression for reflection and transmission coefficient at the boundary of a harmonic wave.
3. What is a stationary wave? Obtain the differential equation for the standing wave.
4. Define longitudinal waves. Derive the differential equation for longitudinal waves on a stretched string.
5. Explain the working of a PIN diode by drawing the VI characteristics.
6. What is an avalanche diode? Explain its working by plotting the VI characteristics graph.

UNIT IV Wave Optics

Short Answer Questions

1. Explain is principle of superposition.
2. What is coherence?
3. What is the difference between interference and diffraction.
4. Discuss the principle of an interferometer.
5. What is the difference between Fresnel and Fraunhofer diffraction?
6. Define Diffraction Grating.

Long Answer Questions

1. Describe the interference pattern obtained due to the superposition of two coherent waves?
2. Give the analytical treatment of the interference of light and hence obtain the condition for maximum and minimum intensity?

3. Derive an expression for fringe width in interference pattern and show that the fringes are uniformly spaced with relevant ray diagram?
4. Explain how Newton's rings are formed in the reflected light?
5. Derive the expression for the diameter of dark and bright rings?
6. Explain the principle and working of Michelson's interferometer.
7. Explain the construction and working of Mach Zehnder interferometer.
8. Obtain the condition for primary maxima in Fraunhofer diffraction due to a single slit and derive an expression for width of the central maxima?
9. Give the theory of Fraunhofer diffraction due to a double slit and compare the results obtained with that due to single slit?
10. Explain with theory the diffraction due to Fraunhofer diffraction of 'n' slits?
11. Explain the formation of Newton's rings and describe an experiment to find the wavelength of a monochromatic source of light.
12. Obtain the expression for resolving power of the diffraction grating.

UNIT V Lasers and Fibre Optics

Short Answer Questions

1. What are stimulated and spontaneous emissions?
2. Explain the characteristics of LASER light.
3. What is population inversion?
4. Mention the methods of pumping.
5. Mention a few applications of Lasers.
6. Describe an Optical fiber.
7. Define Total internal reflection.
8. What is acceptance angle?
9. Define Numerical aperture.
10. Define attenuation in optical fibers.

Long Answer Questions

1. Derive the Einstein coefficients.
2. What is population inversion? Explain how it is achieved in a He – Ne LASER
3. Explain the construction and working of a Ruby LASER.
4. Explain the working of Carbon dioxide LASER.
5. What are the applications of LASERS in engineering and technology?
6. What is FIBRE? Explain principle in optical fibre and their applications.
7. Explain construction of a fibre.
8. Give an expression for Acceptance angle, cone and Numerical aperture.
9. Explain the various types of fibers and optical fibers in Communication systems.
10. Explain the optical fiber communication system.
11. Mention the applications of optical fibers in medicine.
12. What are the various types of losses in optical fibers? Explain Bending losses.

Objective Questions

UNIT I Introduction to Mechanics

1. Which of the following statement is correct?
   (a) A force is an agent which produces or tends to produce motion.
   (b) A force is an agent which stops or tends to stop motion.
   (c) A force may balance a given number of forces acting on a body.
   (d) Both (a) and (b).
2. If the arm of a couple is doubled, its moment will be _____.
   (a) be halved (b) remain the same (c) be doubled (d) none of these
3. A couple consists of _____.
   (a) two like parallel forces of same magnitude.
   (b) two like parallel forces of different magnitudes.
   (c) two unlike parallel forces of same magnitude.
   (d) two unlike parallel forces of different magnitudes.
4. The friction experienced by a body, when in motion, is known as _____.
   (a) Rolling friction (b) dynamic friction (c) limiting friction (d) static friction
5. A body of weight W is required to move up on rough inclined plane whose angle of inclination with the horizontal is α. The effort applied parallel to the plane is given by _____. (where $\mu = \tan\varphi$ = Coefficient of friction between the plane and the body.
   (a) $P = W \tan\alpha$ (b) $P = W \tan(\alpha + \varphi)$
   (c) $P = W (\sin\alpha + \mu\cos\alpha)$ (d) $P = W (\cos\alpha + \mu\sin\alpha)$
6. Static friction is always _____ dynamic friction.
   (a) Equal to (b) Less than (c) Greater than (d) none of these
7. A body will begin to move down an inclined plane if the angle of inclination of the plane is _____ the angle of friction.
   (a) Equal to (b) Less than (c) Greater than (d) none of these
8. The maximum frictional force, which comes into play, when a body just begins to slide over the surface of the other body, is known as _____.
   (a) Static friction (b) Dynamic friction (c) Limiting friction (d) Coefficient of friction
9. The coefficient of friction depends on _____.
   (a) Area of contact (b) Shape of surfaces (c) Strength of surfaces (d) Nature of surface
10. Frictional force encountered after commencement of motion is called _____.
    (a) Post friction (b) Limiting friction(c) Kinematic friction (d) Frictional resistance
11. Coefficient of friction is the _____.
    (a) angle between normal reaction and the resultant of normal reaction and limiting friction
    (b) ratio of limiting friction and normal reaction
    (c) the friction force acting when the body is just about to move
    (d) the friction force acting when the body is in motion

UNIT II Harmonic Oscillations

1. Which of the following is not the unit of power?
   a) kW b) HP c) kcal/sec d) kg m/sec
2. In order to double the period of simple pendulum, the length of the string should be:
   a) Halved b) doubled c) quadrupled d) None of these
3. The maximum velocity of a particle moving with simple harmonic motion is _____.
   a) ω b) ωr c) $\omega^2 r$ d) ω/r
4. The time period of oscillation of a simple pendulum is given by _____
5. The expression for the decay of energy of a damped harmonic oscillator is _____
6. Critical damping is defined as _____.
7. The quality factor of an electrically resonant oscillator is _____
8. If the total impedance of an electrical circuit is maximum then the it is said to be at _____
9. A forced damped oscillator is defined as _____
10. The power in an oscillator circuit is given by _____

UNIT III Waves in one dimension

1. The standard wave equation is _____
2. The boundary condition for the reflection of a wave is _____.
3. The boundary condition for the transmission of a wave is _____.
4. An eigen frequency is defined as _____.
5. The general equation of a standing wave is given by _____.
6. If the direction of vibration is along the direction of propagation it is called _____.
7. Transverse waves are defined as _____.
8. The fundamental frequency of vibration is n = _____.
9. Sound waves may either _____ and _____.
10. Simple Harmonic motion is defined as _____.

UNIT IV Wave Optics

1. The contrast ratio for sustained interference is _____.
   a) Infinity b) zero c) maximum d) minimum

2. Which of the following can give sustained interference?
   a) Two independent laser sources b) Two independent light bulbs

   c) Two sources having larger width d) Two sources very far away from each other

3. Two waves are known to be coherent if they have _____.
   a) Same amplitude b) Same wavelength c) Same amplitude and wavelength

   d) Constant phase difference and same wavelength

4. In Fresnel's experiment, the width of the fringe depends upon the distance _____.
   a) Between the prism and the slit aperture

   b) Of the prism from the screen

c) Of screen from the imaginary light sources

d) Of the screen from the prism and the distance from the imaginary sources

5. In case of diffraction the minima is _____.
   a) completely dark b) partially dark

   c) Sometime dark and sometimes bright d) None

6. The fringe width of the diffraction fringes is _____.
   a) constant b) varying c) increasing d) decreasing

7. The similarity between the diffraction and an interference pattern on the screen is ___.
   a) Formation of alternate dark and bright bands of uniform width

   b) Formation of alternate dark and bright bands of uniform intensity

   c) Formation of alternate dark and bright bands of variable intensity

   d) None

8. In a double slit diffraction pattern, if the slit width is equal to the half the distance between the slits then the _____ ordered _____ fringes are missing.
   a) even, interference b) even, diffraction c) odd, interference d) odd, diffraction
9. In Fraunhofer diffraction, the source and the screen from the diffraction elements are at _____.
   a) the origin b) known distance c) infinite distance

   d) source is at finite distance and screen is at infinite distance
10. In Fresnel diffraction, the source and the screen from the diffraction elements are at:
   a) the origin b) known distance c) infinite distance

   d) source is at finite distance and screen is at infinite distance.

UNIT V Lasers and Fibre Optics

1. Working of an optical fiber is based on _____.
   a. Total internal reflection
   b. Refraction
   c. Scattering
   d. None
2. The refractive index of the core is always greater than that of the cladding.
   a) True b) Falsec) Can't say d) Some times
3. The difference in the refractive indices of core and cladding must be _____.
   a. More
   b. Small
   c. uniform

d. None

4. The refractive index profile for the step index fiber is _____.
    a. step wise increase
    b. radially increasing
    c. constant value
    d. none
5. For graded index fiber the refractive index profile is _____.
    a. simple harmonic
    b. Step wise increase
    c. Radially increases
    d. None
6. In a graded index fiber, the refractive index gradually decreases from core to cladding.
    a) True b) False c) Can't say d) None
7. In a step index fiber, the difference in the refractive indices of core and cladding is __.
    a) Small b) Large c) Zero d) Unity
8. The refractive index difference in a step index fiber multi mode fiber is _____.
    a) Small b) Large c) Zero d) None
9. The inter-modal dispersion in an SI fiber is _____.
    a) Small b) Large c) Zero d) None
10. For small distance communication such as LAN _____ fibers are used.
    a. Single mode Step index
    b. Multi mode Step index
    c. Graded index
    d. None
11. For a graded index fiber the dispersion is _____.
    a) Small b) Large c) Zero d) None
12. Communication through the GI fiber is easier than in the SI fiber.
    a) True b) False c) Can't say d) None
13. Bending losses in optical fibers are due to _____.
14. Micro-bending losses arise due to _____.
15. Increase in the amplitude of a signal to maximum is called _____.
    a. attenuation
    b. amplification
    c. incremental amplitude
    d. None
16. For better signal transmission, the attenuation of the optical fiber must be _____.
    a. less
    b. more
    c. equal to average amplification
    d. None
17. Optical fibers absorb more in the _____ region of EM spectrum. (IR region)
    a. Visible
    b. UV

c. IR
d. Microwave

XII. GATE QUESTIONS: NA

XIII. WEBSITES:

1. www.motionmountain.com
2. www.einsteinhome.com
3. http://nptel.ac.in/

XIV. EXPERT DETAILS:

1. Prof. RavindranEthiraj, Retd Professor, Department of Physics, OU
2. Prof. P. Kishtaiah, Department of Physics, OU
3. Prof. Nagabhushanam, Department of Physics, OU
4. Prof. K. NarayanaRao, School of Physics , HCU

XV. JOURNALS:

INTERNATIONAL

1. Journal of Physics (American Institute of Physics)

NATIONAL

2. Indian Journal for Pure and Applied Physics.

XVI. LIST OF TOPICS FOR STUDENT SEMINARS:

1. Use of constraints in solving problems in mechanics.
2. Energy in damped harmonic oscillator
3. Wave equation for a standing wave
4. Diffraction due to N - slits
5. Applications of Lasers and optical fibers

XVII. CASE STUDIES / SMALL PROJECTS:

1. Determination of Cauchy's Constants using optical parameters
2. Determination of RI of liquid using Newton's Rings setup.
3. Understanding vibrations on stretched string - Sonometer
4. Understanding the properties of LASERs.
5. Comparison between mechanical and electrical harmonic oscillator.

ASSIGNMENT QUESTIONS

ASSIGNMENT-I

1. Write a note on completeness of Newton's laws in describing motion of a particle.
2. State Newton's second law of motion.
3. Explain the types of friction with examples?
4. Define the following: (i) Angle of Repose (ii) Coefficient of frictions (iii) Angle of
   a. Friction.
5. Show that Newton's laws of motion are invariant.
6. Derive Newton's laws of motion in polar coordinates.
7. What are the characteristics of a simple harmonic wave?
8. Write a note on damped harmonic oscillator.
9. Explain mathematically the effect of variations in g (acceleration due to gravity) on the oscillations of a simple pendulum.
10. Deduce a differential equation of a damped harmonic oscillator.
11. Derive the expression for the decay of energy in a damped harmonic oscillator.
12. Distinguish between transverse and longitudinal waves.
13. Write a short note on transverse vibrations on strings.
14. What are transverse waves derive the expression for the fundamental frequency.

ASSIGNMENT-II

1. What is impedance matching?
2. What are the characteristics of a standing wave?
3. Define longitudinal waves. Derive the differential equation for longitudinal waves on a stretched string.
4. Explain the working of a PIN diode by drawing the VI characteristics.
5. What is an avalanche diode? Explain its working by plotting the VI characteristics graph
6. What is the difference between interference and diffraction.
7. Discuss the principle of an interferometer.
8. Give the analytical treatment of the interference of light and hence obtain the condition for maximum and minimum intensity?
9. Derive an expression for fringe width in interference pattern and show that the fringes are uniformly spaced with relevant ray diagram?
10. Explain how Newton's rings are formed in the reflected light?
11. Derive the expression for the diameter of dark and bright rings?
12. Explain the principle and working of Michelson's interferometer.
13. Explain the construction and working of Mach Zehnder interferometer.
14. What are stimulated and spontaneous emissions?
15. Explain the characteristics of LASER light.
16. What is population inversion?
17. Derive the Einstein coefficients.
18. What is population inversion? Explain how it is achieved in a He – Ne LASER
19. Explain the construction and working of a Ruby LASER.

20. Explain the working of Carbon dioxide LASER.
21. What are the applications of LASERS in engineering and technology?
22. What is FIBRE? Explain principle in optical fibre and their applications.
23. Explain construction of a fibre.

Tutorial Topics

1. Explain the types of friction with examples?
2. Define the following: (i) Angle of Repose (ii) Coefficient of frictions (iii) Angle of
    a. Friction.
3. Show that Newton's laws of motion are invariant.
4. Derive Newton's laws of motion in polar coordinates.
5. What are the characteristics of a simple harmonic wave?
6. Write a note on damped harmonic oscillator.
7. Explain mathematically the effect of variations in g (acceleration due to gravity) on the oscillations of a simple pendulum.
8. Deduce a differential equation of a damped harmonic oscillator.
9. Derive the expression for the decay of energy in a damped harmonic oscillator.
10. Distinguish between transverse and longitudinal waves.
11. Write a short note on transverse vibrations on strings.
12. What are transverse waves derive the expression for the fundamental frequency.
13. Explain how Newton's rings are formed in the reflected light?
14. Derive the expression for the diameter of dark and bright rings?
15. Explain the principle and working of Michelson's interferometer.
16. Explain the construction and working of Mach Zehnder interferometer.
17. What are stimulated and spontaneous emissions?
18. Explain the characteristics of LASER light.
19. What is population inversion?
20. Derive the Einstein coefficients.
21. What is population inversion? Explain how it is achieved in a He – Ne LASER
22. Explain the construction and working of a Ruby LASER.
23. Explain the working of Carbon dioxide LASER.

HOLY MARY INSTITUTE OF TECHNOLOGY & SCIENCE
Bogaram (V), Keesara (M), Medchal (D). 501301
www.hits.ac.in Email: principalhitscoe@hmgi.ac.in

HAND BOOK

Subject : MATHEMATICS - I

Academic Year : 2018-2019

Department:- SCIENCE & HUMANITIES

Year :- I-B.Tech (I-Sem)

HOLY MARY INSTITUTE OF TECHNOLOGY & SCIENCE
Bogaram (V), Keesara (M), Medchal (D). 501301
www.hits.ac.in Email: principalhitscoe@hmgi.ac.in

SUBJECT :- MATHEMATICS-I

1. Objectives and Relevance
2. Scope
3. Prerequisites
4. Syllabus
5. Suggested Books
6. Unit-wise Planner
7. Session Plan
8. Websites
9. Journals
10. Question Bank:-
    i. JNTU
    ii. GATE
    iii. IES

OBJECTIVES AND RELEVANCE

Mathematics is a science of pattern that engineers seek out whether found in numbers, space science computers, imaginary abstractions or elsewhere. Knowledge and use of basic mathematics have always been an inherent and integral part of engineering. From stress analysis of simple machine components to numerical descriptions of various shapes of new gadgets (using CAD packages), from using FBD's (free body diagrams) for solving out the problems in engineering Mechanics, to using Bernoulli equation or mass flow rate equation in fluid mechanics, from calculation of heat and mass flow in various systems to calculating of engine power or shaft power in engineering systems, from reliability in electrical power circuits in house hold or any other appliances to traffic in Networks. Mathematics crosses boundaries in a way no other technical subjects can

SCOPE

The course on Mathematics-I is to impart rigorous mathematical skills in matrices, sequences and series,fourier series and transforms, partial derivatives, Striking the right balance between theory and applications, will enable students to comprehend and to solve several engineering problems. The applications of Matrices will be highly helpful to solve and understand several phenomena in nature. Fourier series and Transforms are used to solve Fredhalm and Neumann problems. In fact, this subject forms the bedrock of basic knowledge on which most engineering courses are structured.

PREREQUISITES

1. Matrices
2. Even and Odd functions
3. Limits and continuity
4. Differentiation and Integration.
5. Polar coordinates.
6. Co-ordinate geometry (2 and 3 dimensions)

SYLLABUS MA101BS: MATHEMATICS - I

B.Tech. I Year I Sem. **L T P C 3 1 0 4 Course**

Objectives: To learn

- Types of matrices and their properties.
- Concept of a rank of the matrix and applying this concept to know the consistency and solving the system of linear equations.
- Concept of Eigen values and eigenvectors and to reduce the quadratic form to canonical form
- Concept of Sequence.
- Concept of nature of the series.
- Geometrical approach to the mean value theorems and their application to the mathematical problems
- Evaluation of surface areas and volumes of revolutions of curves.
- Evaluation of improper integrals using Beta and Gamma functions.
- Partial differentiation, concept of total derivative
- Finding maxima and minima of function of two and three variables.

Course Outcomes: After learning the contents of this paper the student must be able to

- Write the matrix representation of a set of linear equations and to analyse the solution of the system of equations
- Find the Eigen values and Eigen vectors
- Reduce the quadratic form to canonical form using orthogonal transformations.
- Analyse the nature of sequence and series.
- Solve the applications on the mean value theorems.
- Evaluate the improper integrals using Beta and Gamma functions
- Find the extreme values of functions of two variables with/ without constraints.

UNIT-I: Matrices

Matrices: Types of Matrices, Symmetric; Hermitian; Skew-symmetric; Skew-Hermitian; orthogonal matrices; Unitary Matrices; rank of a matrix by Echelon form and Normal form, Inverse of Non-singular matrices by Gauss-Jordan method; System of linear equations; solving system of Homogeneous and Non-Homogeneous equations. Gauss elimination method; Gauss Seidel Iteration Method.

UNIT-II: Eigen values and Eigen vectors

Linear Transformation and Orthogonal Transformation: Eigen values and Eigenvectors and their properties: Diagonalization of a matrix; Cayley-Hamilton Theorem (without proof); finding inverse and power of a matrix by Cayley-Hamilton Theorem; Quadratic forms and Nature of the Quadratic Forms; Reduction of Quadratic form to canonical forms by Orthogonal Transformation

UNIT-III: Sequences & Series

Sequence: Definition of a Sequence, limit; Convergent, Divergent and Oscillatory sequences. Series: Convergent, Divergent and Oscillatory Series; Series of positive terms; Comparison test, p-test, D-Alembert's ratio test; Raabe's test; Cauchy's Integral test; Cauchy's root test; logarithmic test. Alternating series: Leibnitz test; Alternating Convergent series: Absolute and Conditionally Convergence.

UNIT-IV: Calculus

Mean value theorems: Rolle's theorem, Lagrange's Mean value theorem with their Geometrical Interpretation and applications, Cauchy's Mean value Theorem. Taylor's Series. Applications of definite integrals to evaluate surface areas and volumes of revolutions of curves (Only in Cartesian coordinates), Definition of Improper Integral: Beta and Gamma functions and their applications.

UNIT-V: Multivariable calculus (Partial Differentiation and applications)

Definitions of Limit and continuity. Partial Differentiation; Euler's Theorem; Total derivative; Jacobian; Functional dependence & independence, Maxima and minima of functions of two variables and three variables using method of Lagrange multipliers.

TEXTBOOKS:

1. B.S. Grewal, Higher Engineering Mathematics, Khanna Publishers, 36th Edition, 2010
2. Erwin kreyszig, Advanced Engineering Mathematics, 9th Edition, John Wiley & Sons, 2006.
3. G.B. Thomas and R.L. Finney, Calculus and Analytic geometry, 9thEdition,Pearson, Reprint, 2002.

REFERENCES:

1. N.P. Bali and Manish Goyal, A text book of Engineering Mathematics, Laxmi Publications, Reprint, 2008.
2. Ramana B.V., Higher Engineering Mathematics, Tata McGraw Hill New Delhi, 11thReprint, 2010.

UNITWISE PLANNER

UNIT	DETAILS	HOURS
I	UNIT – I Matrices: Types of Matrices, Symmetric; Hermitian; Skew-symmetric; Skew-Hermitian; orthogonal matrices; Unitary Matrices; rank of a matrix by Echelon form and Normal form, Inverse of Non-singular matrices by Gauss-Jordan method; System of linear equations; solving system of Homogeneous and Non-Homogeneous equations. Gauss elimination method; Gauss Seidel Iteration Method.	13
II	UNIT – II **Eigen values and Eigen vectors** Linear Transformation and Orthogonal Transformation: Eigen values and Eigenvectors and their properties: Diagonalization of a matrix; Cayley-Hamilton Theorem (without proof); finding inverse and power of a matrix by Cayley-Hamilton Theorem; Quadratic forms and Nature of the Quadratic Forms; Reduction of Quadratic form to canonical forms by Orthogonal Transformation	13
III	UNIT-III **Sequences & Series** Sequence: Definition of a Sequence, limit; Convergent, Divergent and Oscillatory sequences. Series: Convergent, Divergent and Oscillatory Series; Series of positive terms; Comparison test, p-test, D-Alembert's ratio test; Raabe's test; Cauchy's Integral test; Cauchy's root test; logarithmic test. Alternating series: Leibnitz test; Alternating Convergent series: Absolute and Conditionally Convergence.	14

IV	UNIT –IV **Calculus** Mean value theorems: Rolle's theorem, Lagrange's Mean value theorem with their Geometrical Interpretation and applications, Cauchy's Mean value Theorem. Taylor's Series. Applications of definite integrals to evaluate surface areas and volumes of revolutions of curves (Only in Cartesian coordinates), Definition of Improper Integral: Beta and Gamma functions and their applications.	19
V	UNIT-V **Multivariable calculus (Partial Differentiation and applications)** Definitions of Limit and continuity. Partial Differentiation; Euler's Theorem; Total derivative; Jacobian; Functional dependence & independence, Maxima and minima of functions of two variables and three variables using method of Lagrange multipliers.	11
Total Classes		**70**

Session Plan

II B.Tech I Sem		MATHEMATICS-I	2018-19				
S. no	**Unit no**	**Topic**	**Week**	**No of sessions planned**	**Mode of teaching BB/PPT/OHP/MM**	**Reference ***	**Remarks**
1	**UNIT-I**	Introduction to Real and Complex matrices		1	BB&PPT		
2		Symmetric,skewsymmetric,hermitian,,skew hermitian,orthogonal and unitary matrices		2	BB		
3		Echelon and Normal form		2	BB		
4		Tutorial class		1	BB		
5		Inverse using Gauss –Jordan method		1	BB&PPT		
6		Solving system of homogeneous equations		1	BB		
7		Solving system of non homogeneous equations		1	BB		
8		Gauss elimination method		1	BB&PPT		
9		Tutorial class		1	BB		
10		Gauss Seidel Iteration method		1	BB&PPT		
11		Test on unit-1		1			
12	**UNIT-II**	Eigen values and Eigen vectors		2	BB&PPT		
13		Properties		1	BB&PPT		

14		Diagonalization of a matrix		1	BB		
15		Tutorial class		1	BB		
16		Cayley-Hamilton theorem and finding inverse of a matrix by using C-H theorem		1	BB		
17		finding powerof a matrix by using C-H theorem		1	BB		
18		Quadratic form and nature		1	BB&PPT		
19		Tutorial class		1	BB		
20		Reduce quadratic form toCanonical form by using Orthogonal transformation		3	BB&PPT		
21		Test on unit-II		1			
22	**UNIT-III**	Basic definition of sequences		1	BB		
23		Basic definition of series		1	BB		
24		Comparison test		1	BB		
25		Tutorial class		1	BB		
26		P-test		1	BB		
27		D-Alembert's test		1	BB		
28		Raabe's test		1	BB		
29		Cauchy's integral test		1	BB		
30		Tutorial class		1	BB		
31		Cauchy's root test		1	BB		
32		Logarithmic test		1	BB		
33		Leibnitz test		1	BB		
34		Absolute and conditionally convergence		1	BB		
35		Test on unit-III		1			
36	**UNIT-IV**	Rolle's theorem		2	BB		
37		Lagrange's mean value theorem		2	BB		
38		Tutorial class		1	BB		
39		Cauchy's mean value theorem		1	BB		
40		Taylor's series		1	BB		
41		Applications of definite integrals		1	BB		
42		Surface areas and volumes of revolution of curves		2	BB		
43		Tutorial class		1	BB		
44		Beta functions		2	BB		

45		Applications		2	BB		
46		Gamma functions and applications		3	BB		
47		Test on unit-IV		1			
48	**UNIT-V**	Limits and continuity definitions		1	BB		
49		Euler's theorem		1	BB		
50		Total derivatives		1	BB		
51		Jacobian ; F.D AND F.I		2	BB		
52		Tutorial class		1	BB		
53		Maxima and minima of function of two variables		1	BB		
54		Maxima and minima of function of three variables		2	BB		
55		Lagrange multiplier method		1	BB		
56		Test on unit-V		1			

TEXT/REFERENCE BOOKS:

1.	B.S. Grewal, Higher Engineering Mathematics, Khanna Publishers, 36th Edition, 2010
2.	Erwin kreyszig, Advanced Engineering Mathematics, 9th Edition, John Wiley & Sons, 2006.
3.	G.B. Thomas and R.L. Finney, Calculus and Analytic geometry, 9th Edition, Pearson, Reprint, 2002.
4.	N.P. Bali and Manish Goyal, A text book of Engineering Mathematics, Laxmi Publications, Reprint, 2008.
5.	Ramana B.V., Higher Engineering Mathematics, Tata McGraw Hill New Delhi, 11thReprint, 2010

Websites

INTERNATIONAL

1. www.mathworld.wolfram.com
2. www.planetmath.org
3. www.sosmath.com
4. www.mathform.org/library
5. www.math.psu.edu

6.www.geocities.com/siliconvalley/2151/matrices.html

1. 2

NATIONAL

1. www.iitb.ac.in
2. www.iitk.ac.in
3. www.iitm.ac.in
4. www.iitd.ernet.in
5. www.tifr.res.in
6. www.isical.ac.in

JOURNALS

INTERNATIONAL

1. Journal of American Mathematical Society.
2. Journal of differential equations - Elsevier.
3. Pacific Journal of Mathematics.
4. Journal of Australian Society.
5. Bulletin of The American Mathematical Society.
6. Bulletin of The Australian Mathematical Society.
7. Bulletin of The London Mathematical Society.
8. Duke Journal of Mathematics.
9. International Journal of Mathematics and Information Technology.
10. Mathematics of Computation
11. Mathematical Logic Quarterly

NATIONAL

1. Journal of Interdisciplinary Mathematics.
2. Indian Journal of Pure and Applied Mathematics.
3. Indian Journal of Mathematics.
4. Indian Academy of Sciences.
5. Current Science (Available in College Library).
6. Differential Equations and Dynamical Systems (Available in College Library).
7. Proceeding of Mathematical Sciences (Available in College Library).
8. Resonance - Journal of Science (Available in College Library)
9. Journal of Mathematical and Physical Sciences.

QUESTION BANK
UNIT-I
MATRICES
LONG ANSWER QUESTIONS

1. (a) Find the Rank of the Matrix, $\begin{bmatrix} 2 & 3 & 7 \\ 3 & -2 & 4 \\ 1 & -3 & -1 \end{bmatrix}$ by reducing it to the normal form.

   (b) Find all the non-trivial solutions of
   $2x - y + 3z = 0, 3x + 2y + z = 0, x - 4y + 5z = 0.$

2. (a) Find the Rank of the Matrix, by reducing it to the normal form $\begin{bmatrix} 1 & 3 & 4 & 5 \\ 1 & 2 & 6 & 7 \\ 1 & 5 & 0 & 10 \end{bmatrix}$.

   (b)Find whether the following system of equations are consistent. If so solve them. $x + 2y + 2z = 2, \quad 3x - 2y + z = 5, \quad 2x - 5y + 3z = -4, \quad x + 4y + 6z = 0.$

3. (a) Express the following system in matrix form and solve by Gauss elimination method.
   $2x_1 + x_2 + 2x_3 + x_4 = 6; \quad 6x_1 - 6x_2 + 6x_3 + 12x_4 = 36$
   $4x_1 + 3x_2 + 3x_3 - 3x_4 = -1; 2x_1 + 2x_2 - x_3 + x_4 106$

   (b)Show that the system of equations 3x+3y+2z=1; x+2y=4; 10y+3z =-2; 2x-3y –z =5 is consistent and hence solve it

4. (a) Find the rank of $\begin{bmatrix} 0 & 1 & -3 & -1 \\ 1 & 0 & 1 & 1 \\ 3 & 1 & 0 & 2 \\ 1 & 1 & -2 & 0 \end{bmatrix}$ using echelon form

5. Solve the system of equations $x + 2y + 3z = 1, \quad 2x + 3y + 8z = 2, \quad x + y + z = 3$

6. (a) Find the rank of $\begin{bmatrix} 1 & 4 & 3 & -2 & 1 \\ -2 & -3 & -1 & 4 & 3 \\ -1 & 6 & 7 & 2 & 9 \\ -3 & 3 & 6 & 6 & 12 \end{bmatrix}$ using echelon form

   (b)Solve the system of equations x+y+w=0, y+z = 0, x+y+w = 0, x+y+2y =0

7. (a) Test for consistency and hence solve the system:
   $x + y + z = 6, \quad x - y + 2z = 5, \quad 3x + y + z = 8, \quad 2x - 2y + 3z = 7$

   (b) Show that the equations
   $x - 4y + 7z = 14, \quad 3x + 8y - 2z = 13, \quad 7x - 8y + 26z = 5$
   are not consistent.

   (c)Show that the system of equations
   $3x + 3y + 2z = 1; x + 2y = 4; 10y + 3z = -2; 2x - 3y - z = 5$ is consistent and hence solve it.

8. (a) Find the Rank of the Matrix, by reducing it to the normal form $\begin{bmatrix} 2 & 1 & 3 & 5 \\ 4 & 2 & 1 & 3 \\ 8 & 4 & 7 & 13 \\ 8 & 4 & -3 & -1 \end{bmatrix}$

   (b) Find whether the following system of equations are consistent. If so solve them. $x + y + 2z = 9, \quad x - 2y + 2z = 3, \quad 2x - y + z = 3, \quad 3x - y + z = 4.$

9. (a) Find the Rank of matrix $\begin{bmatrix} 0 & 1 & -3 & 1 \\ 1 & 0 & 1 & 1 \\ 3 & 1 & 0 & 2 \\ 1 & 1 & -2 & 0 \end{bmatrix}$.

(b) .Find the inverse of A=$\begin{bmatrix} 1 & 1 & 3 \\ 1 & 3 & -3 \\ -2 & -4 & -4 \end{bmatrix}$ by gauss Jordan method

10. Find the values of a and b for which the equations x+y+z=3,x+2y+2z=6,x+9y+az=b have

(i) Unique solution (ii)Infinite number of solutions (iii)no solution

11. Solve the system of equations $x+2y+3z=1, 2x+3y+8z=2, x+y+z=3.$

12. Find the rank of (a) $\begin{bmatrix} 1 & 4 & 3 & -2 & 1 \\ -2 & -3 & -1 & 4 & 3 \\ -1 & 6 & 7 & 2 & 9 \\ -3 & 3 & 6 & 6 & 12 \end{bmatrix}$

(b) $\begin{bmatrix} 2 & -4 & 3 & -1 & 0 \\ 1 & -2 & -1 & -4 & 2 \\ 0 & 1 & -1 & 3 & 1 \\ 4 & -7 & 4 & -4 & 5 \end{bmatrix}$

SHORT ANSWER QUESTIONS

1. Define nilpotent matrix
2. Define lower and upper triangular matrices
3. Define rank of a non-singular matrix of order 'n'.
4. Write about Echelon Form.
5. Find the rank of the matrix $A=\begin{bmatrix} 1 & 1 & 1 & 1 \\ 1 & 1 & 1 & 1 \\ 1 & 1 & 1 & 1 \\ 1 & 1 & 1 & 1 \end{bmatrix}$
6. Write the properties of rank.
7. If r is the rank of a matrix of order m x n, then rank is
8. If the rank of the matrix $A=\begin{bmatrix} 1 & 1 & a \\ 1 & 2 & 3 \\ 0 & 1 & 1 \end{bmatrix}$ is 3, then find the value of 'a'
9. Describe The rank of a matrix in normal form
10. Find the trace of a matrix $A=\begin{bmatrix} 1 & 0 & 4 \\ 0 & 2 & 3 \\ 0 & 1 & -3 \end{bmatrix}$

OBJECTIVE QUESTIONS

1. A square matrix is said to be symmetric if $\underline{A^T = A}$
2. The diagonal elements of a skew symmetric matrix are all **<u>0</u>**
3. If A is 3x3 non singular matrix then its rank is **<u>3</u>**
4. If A and B are matrices and AB is defined then the rank of a matrix AB is **<u>≤min(rankA,rank B)</u>**
5. The transpose of an orthogonal matrix is **<u>orthogonal</u>**
6. The inverse of an orthogonal matrix is **<u>orthogonal</u>**

7. If A is Hermitian matrix then iA is **Skew Hermitian**
8. The diagonal elements of a skew hermitian matrix are **either zeros or purely imaginary**
9. If the rank of matrix A is 2 then rank of A^T is **2**
10. Every square matrix can be expressed as the sum of **symmetric and skew symmetric**
11. The matrix A =$\begin{bmatrix} cos\theta & sin\theta \\ -sin\theta & cos\theta \end{bmatrix}$ is **orthogonal**
12. The matrix $\begin{bmatrix} i & 0 & 0 \\ 0 & 0 & i \\ 0 & i & 0 \end{bmatrix}$ is **skew hermitian**
13. The matrix A=$\begin{bmatrix} a+ic & -b+id \\ b+id & a-ic \end{bmatrix}$ is unitary if and only if $a^2+b^2+c^2+d^2 = \mathbf{1}$
14. A square matrix A is said to be unitary if **AA^{θ}=I**
15. Homogeneous system of linear equations are always **consistant**
16. Inverse of a unitary matrix is **unitary**
17. Rank of a matrix is **unique**
18. Rank of I_n is **n**
19. If A and B are symmetric matrices then AB is symmetric if and only if **AB=BA**
20. If A is a non zero column matrix and B is a non zero row matrix the rank of AB is **1**

UNIT-II
EIGEN VALUES AND EIGEN VECTORS
LONG ANSWER QUESTIONS

1. Determine the characteristic roots and the corresponding characteristic vectors of the matrix $A=\begin{bmatrix} 8 & -6 & 2 \\ -6 & 7 & -4 \\ 2 & -4 & 3 \end{bmatrix}$.

2. Determine the characteristic roots and vectors of the matrix $A=\begin{bmatrix} 1 & 1 & 1 \\ -1 & -3 & -3 \\ 2 & 4 & 4 \end{bmatrix}$

3. Verify Cayley Hamilton theorem and find the inverse of $\begin{bmatrix} 1 & 0 & 3 \\ 2 & -1 & -1 \\ 1 & -1 & 1 \end{bmatrix}$.

4. Verify Cayley Hamilton theorem and find the inverse of $\begin{bmatrix} 1 & 0 & 3 \\ 2 & -1 & -1 \\ 1 & -1 & 1 \end{bmatrix}$.

5. Diagonalise the matrix $\begin{bmatrix} -1 & 2 & -2 \\ 1 & 2 & 1 \\ -1 & -1 & 0 \end{bmatrix}$

.

6. Reduce the quadratic form to canonical form by an orthogonal reduction and state the
nature of the quadratic form $x_1^2+2x_2^2+2x_3^2-2x_1x_2+2x_1x_3-2x_2x_3$.
7. Find the transformation which will transform $4x^2+3y^2+z-8xy-6yz+4zx$ into a sum of square and find its reduced form
8. Discuss the nature of the quadratic form and reduce it to canonical form $x^2+4xy+6xz-y^2+2yz-4z^2$.
9. Reduce the quadratic form $3x^2-2y^2-z^2+12yz+8yz-4xy$ to canonical form by an orthogonal reduction and state the nature of the quadratic form.

10. Reduce the quadratic form $6x_1^2+3x_2^2+3x_3^2-4x_1x_2-2x_2x_3+4x_2x_1$ to the sum of squares and find the corresponding linear transformation. Also find the index and signature.

SHORT ANSWER QUESTIONS

1. Define Eigen values and Eigen vectors of a matrix

2. Define Cayeley Hamilton theorem

3. -1,-2 are two Eigen values of the third-order square matrix A with det A= 6. Then find he Eigen values of $-A$

4. If matrix $A=\begin{bmatrix}5 & 1\\ 0 & 5\end{bmatrix}$ then find the latent roots of B, which is similar to A

5. If A is a non-singular matrix with λ_i as its eigen-values then obtain the Eigen values of Adj A

6. If $A=\begin{bmatrix}1 & 2\\ 2 & -1\end{bmatrix}$ and $A^4=xI$ then determine x

7. Find the Eigen values of the matrix A=$\begin{bmatrix}-1 & 2 & -2\\ 1 & 2 & 1\\ -1 & -1 & 0\end{bmatrix}$

8. verify Cayeley Hamilton theorem for $\begin{bmatrix}6 & 3\\ -2 & 1\end{bmatrix}$

9.If λ is an eigen value of a non $-$ singular matrix A, then $\frac{|A|}{\lambda}$ is an eigen value of the matrix Adj A

10. If λ is an eigen value of an orthogonal matrix then $\frac{1}{\lambda}$ is also an eigen value

OBJECTIVE QUESTIONS

1. The Eigen values of $\begin{bmatrix}6 & 3\\ -2 & 1\end{bmatrix}$ are <u>3, 4</u>

2. If the determinant of matrix of order 3 is 12. And two eigen values are 1 and 3, then the third Eigen value is <u>4</u>

3. If A = $\begin{bmatrix} 1 & -1 & 2 \\ 0 & 2 & 4 \\ 0 & 0 & 3 \end{bmatrix}$ then the Eigen values of A are <u>1, 2, 3</u>

4. The sum of Eigen values of A = $\begin{bmatrix} 1 & -2 & 2 \\ 0 & 1 & 3 \\ 3 & -1 & 2 \end{bmatrix}$ is <u>4</u>

5. If the Eigen values of A are (1,-1,2) then the Eogen values of Adj A are <u>-2,2,1</u>

6. If the Eigen values of A are (2,3,4) then the Eigen values of 3A are ------

   a) 2,3,4 b) ½, 1/3, ¼ c) -2,3,2 d) 6,9,12

7. If the Eigen values of A are (2,3,-2) then the Eigen value of A-3I are -----

   a) -1,0,-5 b) 2,3,-2 c) -2,-3,2 d) 1,2,2

8. If A is a singular matrix then the product of the Eigen values of A is -----

   a) 1 b) -1 c) can't be decided d) 0

9. If two Eigen vectors of a symmetric matrix of order 3 are $\begin{bmatrix} 2 \\ -1 \\ 0 \end{bmatrix}$ and $\begin{bmatrix} 1 \\ 2 \\ -1 \end{bmatrix}$ then the third Eigen vector is------

   a) $\begin{bmatrix} 1 \\ 2 \\ -1 \end{bmatrix}$ b) $\begin{bmatrix} 1 \\ 2 \\ 3 \end{bmatrix}$ c) $\begin{bmatrix} 1 \\ 2 \\ 0 \end{bmatrix}$ d) $\begin{bmatrix} 1 \\ 2 \\ 5 \end{bmatrix}$

10. If the trace of A (2x2 matrix) is 5 and the determinant is 4, then the eigen values are ----

    a) 2, 2 b) -2, 2 c) -1, -4 d) 1, 4

11. Sum of the eigen values of matrix A is equal to the----

    a) Principal diagonal elements of A b) Trace of matrix A c) A&B d) None

12. If A = $\begin{bmatrix} 4 & 2 \\ -3 & 3 \end{bmatrix}$ then A^{-1} = ----

    a) $\frac{1}{6}[7I - A]$ b) $\frac{1}{4}[5I - A]$ c) $\frac{1}{2}[7I - A]$ d) $\frac{1}{18}[7I - A]$

13. If A = $\begin{bmatrix} 6 & 2 \\ 1 & -1 \end{bmatrix}$ then $2A^2-8A-16I$ = -----

a) I b) 2A c) A-I d) 5I

14. If A has eigen values (1,2) then the eigen values of $3A+4A^{-1}$ are -----

a) 3, 8 b) 7, 11 c) 7, 8 d) 3, 6

15. If A = $\begin{bmatrix} 1 & 2 \\ 3 & 4 \end{bmatrix}$ $then\ A^3 =$ -------

16. a) $2A^2+5A$ b) $4A^2+5A$ c) $2A^2+4A$ d) $5A^2+2A$

17. If $D = P^{-1}AP$ then A^2 = -----

a) PDP^{-1} b) $P^2D^2(P^{-1})^2$ c) $(P^{-1})^2D^2\ (p^2)$ d) PD^2P^{-1}

18. The product of Eigen values of A = $\begin{bmatrix} 1 & 1 & 3 \\ 1 & 5 & 1 \\ 3 & 1 & 1 \end{bmatrix}$ is ------

a) 18 b) -18 c) 36 d) -36

19. If one of the eigen values of A is zero then A is -----

a) Singular b) Non-Singular c) Symmetric d) Non-Symmetric

20. If A is a square matrix, D is a diagonal matrix whose elements are eigen values of A and P is the matrix whose Columns are eigen vectors of A^4, then A^4 = _____

a) PDP^{-1} b) PD^4P^{-1} c) $P^{-1}D^2P$ d) $P^{-1}D^4P$

21. $\frac{|A|}{\lambda}$ is an Eigen value of <u>(adj A) A</u>

Unit-III
SEQUENCES AND SERIES
LONG ANSWER QUESTIONS

1. Examine the convergence of the series $\frac{1}{1^p}+\frac{x}{3^p}+\frac{x^2}{5^p}+\cdots.+\frac{x^{n-1}}{(2n-1)^p}+\cdots$

2: Test the convergence of the series $\left(\frac{2}{3}\right)x+\left(\frac{3}{4}\right)^2x^2+\left(\frac{4}{5}\right)^3x^3+\cdots$

3. Test the convergence of the series $\frac{x}{3}+\frac{1}{3}.\frac{2}{5}x^2+\frac{1}{3}.\frac{2}{5}.\frac{3}{7}x^3+\cdots.$

4 show that $\sum_{n=2}^{\infty}\frac{1}{n(logn)^p}$ converges if p>1 and diverges if 0<p≤1

5. $1+\frac{2}{5}x+\frac{6}{9}x^2+\ldots\ldots\ldots+\frac{2^n-2}{2^n+1}x^{n-1}+\ldots\ldots\ldots$(x>0)

6. Discuss the convergence of the series $\sum_{n=1}^{\infty}(-1)^{n+1}\frac{1}{n^p}\ where\ 0\le p\le 1$

7. Show that the series $\sum_{n=1}^{\infty}(-1)^{n+1}\frac{n}{3n-2}$ oscillates

8. Examine the convergence of the series
$\frac{1}{1^p}+\frac{x}{3^p}+\frac{x^2}{5^p}+\cdots.+\frac{x^{n-1}}{(2n-1)^p}+\cdots$

9. Test the convergence of the series $\frac{x}{1.2}+\frac{x^2}{3.4}+\frac{x^3}{5.6}+\cdots$

10. Test for convergence of the series (i)$\sum_{n=1}^{\infty}\frac{n^3+1}{2^n+1}$. (ii) $\sum\frac{1}{n^{4\frac{1}{n}}}$

SHORT ANSWER QUESTIONS

1. Test for convergence $\sum_{n=1}^{\infty}\frac{2n-1}{n(n+1)(n+2)}$

2. Test for convergence $\sum_{n=1}^{\infty} sin\frac{1}{n}$

3. $1+\frac{1}{1!}+\frac{1}{2!}+\ldots\ldots\ldots$

4. $\sum_{n=1}^{\infty}\frac{n^4}{n!}$

5. $\sum\frac{1.2.3\ldots..n}{3.5.7..(2n+1)}$

6. $1+\frac{x}{2}+\frac{x^2}{5}+\ldots\ldots\ldots$(x>0)

7. $\sum_{n=1}^{\infty}\frac{n^2}{2^n}$

8. $\frac{1}{2\sqrt{1}}+\frac{x^2}{3\sqrt{2}}+\ldots..+\infty$

9. $\sum\frac{1}{n(n+1)}$

10. $\sum\frac{1}{4n^2-1}$

OBJECTIVE QUESTIONS

1. The series $\sum_{n=1}^{\infty}\frac{1}{n^2}$ is……

2. The series $\sum_{n=1}^{\infty}\sin\left(\frac{1}{n}\right)$ is ……

3. The series $\sum_{n=1}^{\infty}\frac{1}{n^p}$ is convergent if ……and divergent if…….

4. The series $1+\frac{1}{2^2}+\frac{2^2}{3^3}+\frac{3^3}{4^4}+\cdots$…… is ……..

5. By the ratio test the series $\sum_{n=1}^{\infty}\frac{2^n n!}{n^n}$ is ……

6. The series $\sum_{n=1}^{\infty}\frac{x^n}{n}$ is convergent if …….. and diverges if……..

7. Discuss the convergence of the series $\frac{1}{1+x}+\frac{1}{1+2x^2}+\frac{1}{1+3x^3}\pm\cdots\ldots\ldots at\ x.$

8. By the Cauchy's root test the series $1+\frac{x}{2}+\frac{x^2}{3^2}+$ …….. is convergent for …….

9. The series whose terms are alternatively positive and negative is called ……..

10.If $\lim_{n\to\infty} a_n \neq 0$ then the series $\sum_{n=1}^{\infty}(-1)^{n+1}$ is an……

11. …….. is used to test the convergence of an alternating series.

12. The series $1-\frac{1}{2}+\frac{1}{3}-\frac{1}{4}+\cdots$ … …. is……..

13. The series $\left(1+\frac{1}{2}\right)-\left(1+\frac{1}{4}\right)+\left(1+\frac{1}{8}\right)$-…… is an ……

14. A series $\sum a_n$ is said to be absolutely convergent if the series $\sum a_n$ is … … ….

15. If $\sum a_n$ $is\ a$ series of positive terms and is convergent then $\sum a_n$ is … … … …

16. If the series $\sum a_n$ is absolutely convergent then $\sum a_n$ is …….

17. A series $\sum a_n$ is said to be conditional convergent if…….

18. The series $\sum \frac{(-1)^n}{n}$ is ……..

19. The series $\sum \frac{(-1)^n}{n^p}$ is convergent if…….

20. The series $\sum \frac{(n+2)(-1)^n}{2^n+5}$ is ……..

Answers:

(1)convergent (2)Divergent (3)p>1,p≤ 1. (4)Divergent (5)Convergent

(6)x<1,x≥ 1 (7)x>1 (8)x ≥ 1

(9) Alternating series (10) Oscillating series. (11) Leibnitz test.

(12) convergent (13)Oscillating senses. (14) Convergent .

(15) absolutely convergent (17) Convergent (18) conditionally convergent

(19) p >1 (20)absolutely convergent.

UNIT – IV
CALCULUS
LONG ANSWER QUESTIONS

1.Verify Rolle's theorem for the functions $\log\left(\frac{x^2+ab}{x(a+b)}\right)$ in [a,b] , a>0, b>0,

2. Using Rolle 's Theorem, show that g(x) = $8x^3-6x^2-2x+1$ has a zero between 0 and 1.

3. If a<b, P.T $\frac{b-a}{1+b^2} < Tan^{-1}b - Tan^{-1}a < \frac{b-a}{1+a^2}$ using Lagrange's Mean value theorem.

Deduce the following.

i). $\frac{\pi}{4}+\frac{3}{25} < Tan^{-1}\frac{4}{3} < \frac{\pi}{4}+\frac{1}{6}$

ii). $\frac{5\pi+4}{20} < Tan^{-1}2 < \frac{\pi+2}{4}$

4. Verify Taylor's theorem for f(x) = $(1-x)^{\frac{5}{2}}$ with Lagrange's form of remainder upto 2

terms in the interval [0,1].

5. Show that

$$\beta(m,n)=\int_0^1 \frac{x^{m-1}+x^{n-1}}{(1+x)^{m+n}}dx$$

6. Prove that

$$\beta(m,n)=\frac{\Gamma(m).\Gamma(n)}{\Gamma(m+n)} \text{ where } m>0, n>0$$

7. Prove that $\Gamma(n)=\int_0^1 \left(\log 1/x\right)^{n-1} dx, n>0$

8. Prove that $\int_0^1 x^m (\log x)^n dx=\frac{(-1)^n n!}{(m+1)^{n+1}}$

9. Evaluate $\iint_R y\,dx\,dy$ where R is the region bounded by the Parabolas $y^2=4x$ and $x^2=4y$

10. Find the volume of tetrahedron bounded by the plane $\frac{x}{a}+\frac{y}{b}+\frac{z}{c}=1$ and the coordinate planes by triple integrals.

SHORT ANSWER QUESTIONS

1. State Lagrange's mean value theorem.
2. Explain the geometrical interpretation of Rolles mean value theorem.
3. Find 'c 'of the Cauchy's mean value theorem for f(x) = e^x , g(x) = $e^{(-x)}$ on [a , b] where a,b > 0.
4. Verify Rolles theorem for f(x) = $1/(x^2)$ on [-1, 1]
5. Find Maclaurin's expansion for log(1+x)
6. Verify Lagrange's Mean value theorem for $f(x)=\log_e x in [1,e]$
7. Define Gamma and Beta function
8. Solve $\Gamma\left(13/3\right)$
9. Show that $\Gamma\left(\frac{1}{2}\right)=\sqrt{\pi}$

$$\int_0^\infty e^{-x^2}dx=\frac{\sqrt{\pi}}{2}$$

10. Evaluate $\int_0^{\frac{\pi}{2}} \sin^5\theta \cos^{\frac{7}{2}}\theta d\theta$

Objective Answer Questions

(1) The value of C of the Rolle's theorem for the function $f(x) = x + \frac{1}{x}$ in $\left[\frac{1}{2}, 2\right]$ is **1**

(2) The value of C of the Rolle's theorem for $f(x) = \frac{x^3}{3} - 3x$ in $[0,3]$ is $\sqrt{3}$

(3) The value of C of the Rolle's theorem for $f(x) = \frac{\sin x}{e^x}$ in $[0, \pi]$ is $\frac{\pi}{4}$

(4) Geometric interpretation of Rolle's theorem is **there is atleast one point on the curve where the tangent is parallel to x-axis**

(5) The value of C of lagrage's mean value theorem for the fuction $f(x) = x^2$ in $[1,5]$ is **3**

(6) The value of C of lagrange's mean value theorem for $f(x) = e^x$ in $[0,1]$ is $\log(e-1)$

(7) The value of C of cauchy's mean value theorem for the functions $f(x) = \sqrt{x}$ and $g(x) = \frac{1}{\sqrt{x}}$ in $[a, b]$ is $\sqrt{ab}$

(8) The value of C of cauchy's mean value theorem for the functions $f(x) = \sin x$ and $g(x) = \cos x$ in $[a, b]$ is $\frac{a+b}{2}$

(9) The value of C of cauchy's mean value theorem for the functions $f(x) = e^x$ and $g(x) = e^{-x}$ in $[a, b]$ is $\frac{a+b}{2}$

(10) Taylor's expansion of $f(x) = \frac{1}{1+x^2}$ is $\sum_{n=0}^{\infty}(-1)^n x^{2n}$, $-1 < x < 1$

(11) $\int_0^{\frac{\pi}{2}} \sin x^3 \cos x^{\frac{5}{2}} dx = \frac{8}{77}$

(12) $\int_0^{\frac{\pi}{2}} \sin x^7 \, dx = \frac{16}{35}$

(13) $\int_0^{\frac{\pi}{2}} \tan \theta^{\frac{1}{2}} \, d\theta = \frac{\pi}{\sqrt{2}}$

(14) $\Gamma\left(\frac{3}{4}\right)\Gamma\left(\frac{1}{4}\right) = \frac{\pi}{\sqrt{2}}$

(15) $\int_0^{\infty} x^6 e^{-2x} \, dx = \frac{45}{8}$

(16) $\int_0^3 \frac{dx}{\sqrt{3x-x^2}} = \pi$

(17) $B(m,m) = 2^{1-2m} B(m, \frac{1}{2})$

(18) $\int_0^1 \frac{x \, dx}{\sqrt{1-x^5}} = \frac{1}{5} B(\frac{2}{5}, \frac{1}{2})$

(19) The value of $\Gamma(\frac{-1}{2})$ is $\underline{-2\sqrt{\pi}}$

(20) The value of $B(1,2) + B(2,1)$ is **1**

UNIT_V

MULTY VARIABLE CALCULUS

LONG ANSWER QUESTIONS

1. If u = f(y-z, z-x, x-y) then prove that $u_x+u_y+u_z= 0$
2. If u = x+y+z , uv=y+z, uvw=z then prove that $\frac{\partial(x,y,z)}{\partial(u,v,w)} = u^2v$
3. If u=$\frac{x+y}{1-xy}$, v=$\tan^{-1} x + \tan^{-1} y$.Find $\frac{\partial(u,v)}{\partial(x,y)}$ .Hence Prove that u and v are functionally dependent. Find the relation between them
4. Verify Euler's theorem for u=$x^2 \tan^{-1}\frac{y}{x} - y^2 \tan^{-1}\frac{x}{y}$ and $\frac{\partial^2 u}{\partial x \partial y} = \frac{x^2-y^2}{x^2+y^2}$
5. Discuss the maxima and minima of $x^3y^2(1-x-y)$
6. Examine the maximum and minimum values of sinx +siny +sin(x+y)
7. Show that rectangular solid of maximum volume that can be inscribed in a given sphere is a cube.
8. Find the volume of the largest rectangular parallelopiped that can be inscribed in the ellipsoid $\frac{x^2}{a^2} + \frac{y^2}{b^2} + \frac{z^2}{c^2} = 1$
9. State Euler's theorem on homogeneous functions for three variables x,y,z
10. If u = xy+yz+zx v = $x^2+y^2+z^2$ w= x+y+z then find the functional relation of u,v,w .

SHORT ANSWER QUESTIONS

1. Define Functional dependence and Independence.
2. S.T the functions u = x + y + z , v = $x^2 + y^2 + z^2$ -2xy – 2yz -2xz and w = $x^3 + y^3 + z^3$ -3xyz are functionally related.
3. If $u = \frac{x}{y}$ and $v = \frac{x+y}{x-y}$ then find $J\left(\frac{u,v}{x,y}\right)$.
4. If u = $x^2 - y^2$, v =2xy where x = r cosθ , y = r sin θ S.T $\frac{\partial(u,v)}{\partial(r,\theta)}$ = $4r^3$.
5. Investigate the maxima & minima, if any, of the function f(x) = x^3y^2 (1-x-y).
6. Find three positive numbers whose sum is 100 and whose product is maximum.
7. Find the minimum value of $x^2 + y^2 + z^2$, given x + y + z =3a.
8. A rectangular box open at the top is to have volume of 32 cubic ft. Find the dimensions of the box requiring least material for its construction

9.Find the shortest distances from the point (1,2,-1) to the sphere $x^2 + y^2 + z^2 = 24$

10. If F = xu+v-y G= u^2+vy+w H = zu-v+vw then compute $\frac{\partial(F,G,H)}{\partial(u,v,w)}$

OBJECTIVE ANSWER QUESTIONS

1) If u = f(x, y, z) then $\underline{xu_x = yu_y = zu_z}$

2) If u= f(x, y) and y is a function of x, then $\frac{\partial u}{\partial x} = \frac{\partial u}{\partial x} + \frac{\partial u}{\partial y} \cdot \frac{dy}{dx}$

3) The necessary conditions for f(x,y) = 0 to have extremum are $\underline{f_x=0, f_y=0}$

4) If u= $\frac{y^2}{2x}$, y = $\frac{x^2+y^2}{2x}$ then $\frac{\partial(u,v)}{\partial(x,y)} = \frac{-y}{x}$

5) If u=x^2y Ø ($\frac{y}{x}$) then x$\frac{\partial u}{\partial x}$ + y$\frac{\partial u}{\partial y}$ = 3u

6)The stationary points of f(x,y) = x^2+xy^2+y^4 is <u>(0,0)</u>

7) For the function f = $\sqrt{x} + \sqrt{y} + \sqrt{z}$ <u>it is a homogeneous function of degree $\frac{1}{2}$</u>

8) If u = 3x+5y and v = 4x-3y then $\frac{\partial(u,v)}{\partial(x,y)}$ = <u>-29</u>

9) $\frac{\partial(u,v)}{\partial(x,y)} * \frac{\partial(x,y)}{\partial(u,v)}$ = <u>1</u>

10) If u = $\sin^{-1}\frac{y}{x}$ then x$\frac{\partial u}{\partial x}$ + y$\frac{\partial u}{\partial y}$ = <u>0</u>

11) If u = e^xsiny, v = e^xcosy then $\frac{\partial(u,v)}{\partial(x,y)}$ = <u>-e^x</u>

12) If u = xy then $\frac{\partial u}{\partial y}$ = <u>x</u>

13) If z is a homogeneous function of degree n, then $x^2 z_{xx}$+2xyz_{xy}+$y^2 z_{yy}$

= n(n-1)z

14) If f(x, y) = xy+(x-y), the stationary points are (1,-1)

15) The function f(x,y) has a maximum value for l>0,ln-m^2 <0

16) The stationary point of x^4+y^4-2x^2+4xy-2y^2 is ($\sqrt{2}$, -$\sqrt{2}$)

17) The minimum of x^2+y^2+z^2 given that x+y+z=3a is $3a^2$

18) The stationery point of $x^3 y^2$(1-x-y) are (0,1)

19) If u(1-v) = x, uv = y then J($\frac{u,v}{x,y}$) . J($\frac{x,y}{u,v}$) = 1

20) If u = $\frac{y}{x}$, v=xy then J($\frac{u,v}{x,y}$) = $\frac{-2y}{x}$

I- ASSIGNMENT QUETIONS

1. Find the rank of $\begin{bmatrix} 0 & 1 & -3 & -1 \\ 1 & 0 & 1 & 1 \\ 3 & 1 & 0 & 2 \\ 1 & 1 & -2 & 0 \end{bmatrix}$ using echelon form

2. Find the Rank of the Matrix, by reducing it to the normal form $\begin{bmatrix} 1 & 3 & 4 & 5 \\ 1 & 2 & 6 & 7 \\ 1 & 5 & 0 & 10 \end{bmatrix}$.

3. Find the values of a and b for which the equations x+y+z=3,x+2y+2z=6,x+9y+az=b have
   (j) Unique solution (ii)Infinite number of solutions (iii)no solution

4. Show that the system of equations
$3x+3y+2z=1;\ x+2y=4;\ 10y+3z=-2;\ 2x-3y-z=5$ is consistent and hence solve it.

5. Solve the system of equations x+y+w=0, y+z = 0, x+y+w = 0, x+y+2y =0

6. Find all the non-trivial solutions of $2x-y+3z=0, 3x+2y+z=0, x-4y+5z=0.$

7. Express the following system in matrix form and solve by Gauss elimination method.

$$2x_1+x_2+2x_3+x_4=6; \quad 6x_1-6x_2+6x_3+12x_4=36$$

$$4x_1+3x_2+3x_3-3x_4=-1;\ 2x_1+2x_2-x_3+x_4 106$$

8. Find the inverse of A=$\begin{bmatrix} 1 & 1 & 3 \\ 1 & 3 & -3 \\ -2 & -4 & -4 \end{bmatrix}$ by gauss Jordan method

9. solve the system 10x+y+z=12,x+10y-z=10 and x-2y+10z=9 using gauss seidal method

10. Determine the characteristic roots and vectors of the matrix $A=\begin{bmatrix} 1 & 1 & 1 \\ -1 & -3 & -3 \\ 2 & 4 & 4 \end{bmatrix}$

11. Verify Cayley Hamilton theorem and find the inverse of $\begin{bmatrix} 1 & 0 & 3 \\ 2 & -1 & -1 \\ 1 & -1 & 1 \end{bmatrix}$.

12. Diagonalise the matrix $\begin{bmatrix} -1 & 2 & -2 \\ 1 & 2 & 1 \\ -1 & -1 & 0 \end{bmatrix}$

13. Reduce the quadratic form to canonical form by an orthogonal reduction and state the nature of the quadratic form $x_1^2 + 2x_2^2 + 2x_3^2 - 2x_1x_2 + 2x_1x_3 - 2x_2x_3$.

14. Find the transformation which will transform $4x^2 + 3y^2 + z - 8xy - 6yz + 4zx$ into a sum of square and find its reduced form

15. Test for convergence $\sum \frac{\sqrt{2n^2-5n+1}}{4n^3-7n^2+2}$

16. $\sum_{n=1}^{\infty}[\sqrt{n^3+1} + \sqrt{n^3}\ ]$

17. $\sum \frac{1}{n}\sin\frac{1}{n}$

18. $\sum \frac{1}{n}\sin\frac{1}{n}$

II- ASSIGNMENT QUETIONS

1. Examine the convergence of the series $\frac{1}{1^p} + \frac{x}{3^p} + \frac{x^2}{5^p} + \cdots . + \frac{x^{n-1}}{(2n-1)^p} + \cdots$
2. Test the convergence of the series $\frac{x}{3} + \frac{1}{3}.\frac{2}{5}x^2 + \frac{1}{3}.\frac{2}{5}.\frac{3}{7}x^3 + \cdots.$
3. Discuss the convergence of the series $\sum_{n=1}^{\infty}(-1)^{n+1}\frac{1}{n^p}$ $where\ 0 \le p \le 1$
4. Show that the series $\sum_{n=1}^{\infty}(-1)^{n+1}\frac{n}{3n-2}$ oscillates
5. Examine the convergence of the series $\frac{1}{1^p} + \frac{x}{3^p} + \frac{x^2}{5^p} + \cdots . + \frac{x^{n-1}}{(2n-1)^p} + \cdots$

6. Test the convergence of the series $\frac{x}{1.2} + \frac{x^2}{3.4} + \frac{x^3}{5.6} + \cdots$

7. Verify Rolle's theorem for the functions $\log\left(\frac{x^2+ab}{x(a+b)}\right)$ in[a,b] , a>0, b>0,

8. If a<b, P.T $\frac{b-a}{1+b^2} < Tan^{-1}b - Tan^{-1}a < \frac{b-a}{1+a^2}$ using Lagrange's Mean value theorem.

Deduce the following.

i). $\frac{\pi}{4} + \frac{3}{25} < Tan^{-1}\frac{4}{3} < \frac{\pi}{4} + \frac{1}{6}$

ii). $\frac{5\pi+4}{20} < Tan^{-1}2 < \frac{\pi+2}{4}$

9. Verify Taylor's theorem for f(x) = $(1-x)^{\frac{5}{2}}$ with Lagrange's form of remainder upto 2 terms in the interval [0,1].

10. Prove that

$$\beta(m,n)=\frac{\Gamma(m).\Gamma(n)}{\Gamma(m+n)} \text{ where } m>0, n>0$$

11. Prove that $\Gamma(n)=\int_0^1\left(\log 1/x\right)^{n-1}dx, n>0$

12. Evaluate $\iint_R y\,dx\,dy$ where R is the region bounded by the Parabolas $y^2=4x$ and $x^2=4y$

13. Find the volume of tetrahedron bounded by the plane $\frac{x}{a}+\frac{y}{b}+\frac{z}{c}=1$ and the coordinate planes by triple integrals.

14. If u = x+y+z , uv=y+z, uvw=z then prove that $\frac{\partial(x,y,z)}{\partial(u,v,w)}=u^2v$

15. Discuss the maxima and minima of $x^3y^2(1-x-y)$

16. Examine the maximum and minimum values of sinx +siny +sin(x+y)

17. F = xu+v-y G= u^2+vy+w H = zu-v+vw then compute $\frac{\partial(F,G,H)}{\partial(u,v,w)}$

18.If u=$\frac{x+y}{1-xy}$, v=$\tan^{-1}x+\tan^{-1}y$.Find $\frac{\partial(u,v)}{\partial(x,y)}$ .Hence Prove that u and v are functionally dependent. Find the relation between them

TUTORIAL QUETIONS

Unit-1

1) Prove that the every square matrix can be expressed as sum of Hermitian and skew Hermitian matrices

2) Find whether the following system of equations are consistent. If so solve them,x+y+2z=9,x-2y+2z=3,2x-y+z=3,3x-y+z=4

3) Find the rank of $\begin{bmatrix} 2 & -4 & 3 & -1 & 0 \\ 1 & -2 & -1 & -4 & 2 \\ 0 & 1 & -1 & 3 & 1 \\ 4 & -7 & 4 & -4 & 5 \end{bmatrix}$ by reducing it into echelon form

4) Reduce the matrix A to its normal form where

$$A=\begin{bmatrix} 1 & 2 & -2 & 3 \\ 2 & 5 & -4 & 6 \\ -1 & -3 & 2 & -2 \\ 2 & 4 & -1 & 6 \end{bmatrix}$$

5) Find the values of a and b for which the equations, x+y+z=3, x+2y+3z=6,x+9y+az=b, have

(i) No solution (ii) A unique solution (iii) Infinite no. of solutions

6) Find the value of p and q so that the equations
$2x + 3y + 5z = 9, 7x + 3y + 2z = 8, 2x + 3y + pz = q$ have
i) No solution ii) Unique solution iii) An infinite number of solutions.
7) Solve the system $\lambda x + y + z = 0, x + \lambda y + z = 0, x + y + \lambda z = 0$ if the system has non-zero solutions
8) Solve the system of equations 3x+3y+2z=1; x+2y=4; 10y+3z =-2; 2x-3y –z =5 using gauss elimination method

Unit-2

1) Determine the characteristic roots and the corresponding characteristic vectors of the matrix $A = \begin{bmatrix} 8 & -6 & 2 \\ -6 & 7 & -4 \\ 2 & -4 & 3 \end{bmatrix}$

2) Verify Cayley Hamilton theorem and find the inverse of $\begin{bmatrix} 1 & 0 & 3 \\ 2 & -1 & -1 \\ 1 & -1 & 1 \end{bmatrix}$.

3) Diagonalise the matrix $\begin{bmatrix} -1 & 2 & -2 \\ 1 & 2 & 1 \\ -1 & -1 & 0 \end{bmatrix}$

4) Reduce the quadratic form to canonical form by an orthogonal reduction and state the nature of the quadratic form $x_1^2 + 2x_2^2 + 2x_3^2 - 2x_1x_2 + 2x_1x_3 - 2x_2x_3$.

5) Find the eigen values and eigen vectors of the matrix A = $\begin{bmatrix} 1 & 3 & 4 \\ 0 & 2 & 5 \\ 0 & 0 & 3 \end{bmatrix}$

6) Show that the sum of the eigen values of a square matrix is equal to its trace and product of the eigen values is equal to its determinant.

7) A Square matrix A and its transpose A^T have the same eigen values.

Unit-3

1. $\sum \frac{\sqrt{2n^2-5n+1}}{4n^3-7n^2+2}$

2. $\sum \frac{1}{n^{\frac{3}{2}}+n+1}$

3. $\frac{1.2}{3.4.5} + \frac{2.3}{4.5.6} + \ldots\ldots\ldots\ldots$

4. $\sum \frac{1}{\sqrt{n}+\sqrt{n+1}}$

5. $\sum_{n=1}^{\infty} [\sqrt{n^3+1} + \sqrt{n^3}]$

6. $\sum \frac{1}{n} \sin \frac{1}{n}$

7. Test for convergence of the series whose nth term is $\frac{x^{2n-1}}{\sqrt{n}(n+1)}$

8. Test for convergence $\sum_{n=1}^{\infty}\{\sqrt[3]{n^3+1}-n\}$

9. Test for convergence $\sum_{n=1}^{\infty}\frac{1.3.5.....(2n+1)}{2.5.8.....(3n+2)}$

10. Using ratio test ,show that the series $\sum\frac{(3-4i)^n}{n!}$ converges

11. Test whether the following series is absolutely convergent /conditionally convergent

$$\sum_{1}^{\infty}(-1)^{n+1}(\sqrt{n+1}-\sqrt{n})$$

12. Test whether the following series is absolutely convergent /conditionally convergent $\sum(-1)^n\frac{\sin\frac{1}{n}}{n-1}$

13. Test the absolute convergence of $\sum_{n=1}^{\infty}\frac{\cos n\pi}{n^2+1}$

Unit-4

1) Verify Rolle's theorem for $f(x) = |x|$ in $[-1,1]$

2) Using Rolle 's Theorem, show that g(x) = $8x^3-6x^2-2x+1$ has a zero between 0 and 1

2) Calculate approximately $\sqrt[5]{245}$ by using lagrange's mean value theorem.

S.T the functions u = x + y + z , v = $x^2 + y^2 + z^2 -2xy - 2yz -2xz$ and w = $x^3 + y^3 + z^3 -3xyz$ are functionally related.

3) Prove that $\int_0^1 x^m(\log x)^n\,dx = \frac{(-1)^n n!}{(m+1)^{n+1}}$, where n is a positive integer and $m > -1$

4) Obtain the Taylor's series expansion of $\sin x$ in powers of $\left(x-\frac{\pi}{2}\right)$

5) Evaluate i) $\int_0^{\frac{\pi}{2}}\sin\theta^5\cos\theta^{\frac{7}{2}}\,d\theta$ ii) $\int_0^{\frac{\pi}{2}}\sqrt{\cot\theta}\,d\theta$

6) Evaluate $\iiint_V (xy+yz+zx)\,dx\,dy\,dz$ where V is the region of space bounded by

$x=0, x=1, y=0, y=2, z=0, z=3$

7) Show that $\beta(m,n)=\int_0^1\frac{x^{m-1}+x^{n-1}}{(1+x)^{m+n}}dx$

8) prove that $\Gamma(n)=\int_0^1\left(\log\frac{1}{x}\right)^{n-1}dx, n>0$

Unit-5

1. verify Euler's theorem for the function U=$\sin^{-1}\frac{x}{y}+\tan^{-1}\frac{y}{x}$ and hence show that $x\frac{\partial u}{\partial x}+y\frac{\partial u}{\partial y}=0$

2. If u=$\tan^{-1}\frac{x^3+y^3}{x+y}$ prove that $x\frac{\partial u}{\partial x}+y\frac{\partial u}{\partial y}=\sin 2u$

3) If u=$\frac{x+y}{x-y}$, v= $\frac{xy}{(x-y)^2}$, determine whether there is a functional relationship between u and v and if so,find it.

4) Examine the extrema of f(x,y) = x^2+xy+y^2+$\frac{1}{x}+\frac{1}{y}$

5) Find the maximum and minuimum values of x+y+z subject to $\frac{1}{x}+\frac{1}{y}+\frac{1}{z}=1$

6) Prove that the functions $u=x+y+z,\ v=xy+yz+zx,\ w=x^2+y^2+z^2$ are functionally dependent and find the relation between them.

7) Find the maximum and minimum values of $f(x,y)=x^3+3xy-3x^2-3y^2+4$.

8) S.T the functions u = x + y + z , v = $x^2 + y^2 + z^2$ -2xy – 2yz -2xz and w = $x^3 + y^3 + z^3$ -3xyz are functionally related.

9) If u = $x^2 - y^2$, v =2xy where x = r cosθ , y = r sin θ S.T $\frac{\partial(u,v)}{\partial(r,\theta)}$ = $4r^3$

10) Find three positive numbers whose sum is 100 and whose product is maximum.

11) Find the minimum value of $x^2 + y^2 + z^2$, given x + y + z =3a

12) A rectangular box open at the top is to have volume of 32 cubic ft. Find the dimensions of the box requiring least material for its construction.

SYLLABUS

SYLLABUS

Course Objectives:

• To learn the fundamentals of computers.

• To understand the various steps in program development.

• To learn the syntax and semantics of C programming language.

• To learn the usage of structured programming approach in solving problems.

Course Outcomes: The student will learn

• To write algorithms and to draw flowcharts for solving problems.

• To convert the algorithms/flowcharts to C programs.

• To code and test a given logic in C programming language.

• To decompose a problem into functions and to develop modular reusable code.

• To use arrays, pointers, strings and structures to write C programs.

• Searching and sorting problems.

Unit - 1: Introduction to Programming

Introduction to components of a computer system: disks, primary and secondary memory, processor, operating system, compilers, creating, compiling and executing a program etc., Number systems

Introduction to Algorithms: steps to solve logical and numerical problems. Representation of

Algorithm, Flowchart/Pseudo code with examples, Program design and structured programming

Introduction to C Programming Language: variables (with data types and space requirements), Syntax and Logical Errors in compilation, object and executable code ,

Operators, expressions and precedence, Expression evaluation, Storage classes (auto, extern,static and register), type conversion, The main method and command line arguments

Bitwise operations: Bitwise AND, OR, XOR and NOT operators

Conditional Branching and Loops: Writing and evaluation of conditionals and consequent branching with if, if-else, switch-case, ternary operator, goto, Iteration with for, while, do-while loops

I/O: Simple input and output with scanf and printf, formatted I/O, Introduction to stdin,stdout and stderr.

Command line arguments

Unit - II: Arrays, Strings, Structures and Pointers:

Arrays: one and two dimensional arrays, creating, accessing and manipulating elements of arrays

Strings: Introduction to strings, handling strings as array of characters, basic string functions available in C (strlen, strcat, strcpy, strstr etc.), arrays of string

Structures: Defining structures, initializing structures, unions, Array of structures

Pointers: Idea of pointers, Defining pointers, Pointers to Arrays and Structures, Use of Pointers in self-referential structures, usage of self-referential structures in linked list (no implementation) Enumeration data type

Unit - III: Preprocessor and File handling in C:

Preprocessor: Commonly used Preprocessor commands like include, define, undef, if, if def, if n def

Files: Text and Binary files, Creating and Reading and writing text and binary files, Appending data to existing files, Writing and reading structures using binary files, Randomaccess using fseek, ftell and rewind functions.

Unit - IV: Function and Dynamic Memory Allocation:

Functions: Designing structured programs, Declaring a function, Signature of a function, Parameters and return type of a function, passing parameters to functions, call by value, Passing arrays to functions, passing pointers to functions, idea of call by reference, Some C standard functions and libraries

Recursion: Simple programs, such as Finding Factorial, Fibonacci series etc., Limitations of Recursive functions

Dynamic memory allocation: Allocating and freeing memory, Allocating memory for arrays of different data types

Unit - V: Introduction to Algorithms:

Algorithms for finding roots of quadratic equations, finding minimum and maximum numbers of a given set, finding if a number is prime number, etc. Basic searching in an array of elements (linear and binary search techniques), Basic algorithms to sort array of elements (Bubble, Insertion and Selection sort algorithms), Basic concept of order of complexity through the example programs

TEXT BOOKS:

1. Byron Gottfried, Schaum's Outline of Programming with C, McGraw-Hill

2. B.A. Forouzan and R.F. Gilberg C Programming and Data Structures, Cengage

Learning, (3rd Edition)

REFERENCE BOOKS:

1. Brian W. Kernighan and Dennis M. Ritchie, The C Programming Language, Prentice

2. Hall of India

3. R.G. Dromey, How to solve it by Computer, Pearson (16th Impression)

4. Programming in C, Stephen G. Kochan, Fourth Edition, Pearson Education.

5. Herbert Schildt, C: The Complete Reference, Mc Graw Hill, 4th Edition

COURSE INFORMATION SHEET

HOLY MARY INSTITUTE OF TECHNOLOGY & SCIENCE

(COLLEGE OF ENGINEERING)

Bogaram (V), Keesara (M), R.R. Dist – 501 301

DEPARTMENT OF COMPUTER SCIENCE & ENGINEERING

PROGRAMME: I **B.Tech – ECE, MECH & CIVIL** AC:YEAR : **2018-2019**	DEGREE: B.TECH
COURSE: **PROGRAMMING FOR PROBLEM SOLVING**	SEMESTER: 1st COURSE COORDINATOR: **V.SUDHEER GOUD, B.V.RAMANA**
COURSE CODE:CS102ES REGULATION:R18	COURSE TYPE: CORE CREDITS: 4
COURSE AREA/DOMAIN: System Programming	CONTACT HOURS: 5 (Lectures) +1 (Tutorial) hours/Week.
CORRESPONDING LAB COURSE CODE (IF ANY):	LAB COURSE NAME **PROGRAMMING FOR PROBLEM SOLVING**

COURSE INFORMATION SHEET

UNIT	DETAILS	HOURS
I	**Unit - 1: Introduction to Programming** Introduction to components of a computer system: disks, primary and secondary memory, processor, operating system, compilers, creating, compiling and executing a program etc., Number systems Introduction to Algorithms: steps to solve logical and numerical problems. Representation of Algorithm, Flowchart/Pseudo code with examples, Program design and structured programming Introduction to C Programming Language: variables (with data types and space requirements), Syntax and Logical Errors in compilation, object and executable code , Operators, expressions and precedence, Expression evaluation, Storage classes (auto, extern, static and register), type conversion, The main method and command line arguments. Bitwise operations: Bitwise AND, OR, XOR and NOT operators Conditional Branching and Loops: Writing and evaluation of conditionals and	**18**

	consequent branching with if, if-else, switch-case, ternary operator, goto, Iteration with for, while, do-while loops I/O: Simple input and output with scanf and printf, formatted I/O, Introduction to stdin,stdout and stderr.Command line arguments	
II	**Unit - II: Arrays, Strings, Structures and Pointers:** Arrays: one and two dimensional arrays, creating, accessing and manipulating elements of arrays Strings: Introduction to strings, handling strings as array of characters, basic string functions available in C (strlen, strcat, strcpy, strstr etc.), arrays of strings Structures: Defining structures, initializing structures, unions, Array of structures Pointers: Idea of pointers, Defining pointers, Pointers to Arrays and Structures, Use of Pointers in self-referential structures, usage of self-referential structures in linked list (no implementation) Enumeration data type	**12**
III	**Unit - III: Preprocessor and File handling in C:** Preprocessor: Commonly used Preprocessor commands like include, define, undef, if, if def, if n def Files: Text and Binary files, Creating and Reading and writing text and binary files, Appending data to existing files, Writing and reading structures using binary files, Randomaccess using fseek, ftell and rewind functions.	**10**
IV	**Unit - IV: Function and Dynamic Memory Allocation:** Functions: Designing structured programs, Declaring a function, Signature of a function, Parameters and return type of a function, passing parameters to functions, call by value, Passing arrays to functions, passing pointers to functions, idea of call by reference, Some C standard functions and libraries Recursion: Simple programs, such as Finding Factorial, Fibonacci	**10**

	series etc., Limitations of Recursive functions Dynamic memory allocation: Allocating and freeing memory, Allocating memory for arrays of different data types	
V	**Unit - V: Introduction to Algorithms:** Algorithms for finding roots of quadratic equations, finding minimum and maximum numbers of a given set, finding if a number is prime number, etc. Basic searching in an array of elements (linear and binary search techniques), Basic algorithms to sort array of elements (Bubble, Insertion and Selection sort algorithms), Basic concept of order of complexity through the example programs	**10**

TEXT/REFERENCE BOOKS:

T/R	BOOK TITLE/AUTHORS/PUBLICATION
T	Byron Gottfried, Schaum's Outline of Programming with C, McGraw-Hill
T	B.A. Forouzan and R.F. Gilberg C Programming and Data Structures, Cengage Learning, (3rd Edition)
R	Brian W. Kernighan and Dennis M. Ritchie, The C Programming Language, Prentice Hall in india
R	R.G. Dromey, How to solve it by Computer, Pearson (16th Impression)
R	Programming in C, Stephen G. Kochan, Fourth Edition, Pearson Education
R	Herbert Schildt, C: The Complete Reference, Mc Graw Hill, 4th Edition

COURSE PRE-REQUISITES:

C.CODE	COURSE NAME	DESCRIPTION	SEM
1	COMPUTER BASICS	**Basics of computer**	

COURSE OBJECTIVES:

1	To learn the fundamentals of computers.

2	To understand the various steps in program development.
3	To learn the syntax and semantics of C programming language.
4	To learn the usage of structured programming approach in solving problems.

COURSE OUTCOMES:

SNO	DESCRIPTION	PO MAPPING
1	**Develop** algorithms from user problem statements.	a, b, e, k
2	**Express** the solutions to computer oriented problems using pseudocode.	
3	**Use** an integrated programming environment to write, compile, and execute programs involving a small number of source files.	
4	**Apply** debugging and testing techniques to locate and resolve errors, and to determine the effectiveness of a program.	
5	**Apply** standard/structured programming techniques including design approaches, use of functions/methods, use of documentation, and avoidance of excessive branching.	

GAPES IN THE SYLLABUS - TO MEET INDUSTRY/PROFESSION REQUIREMENTS:

SNO	DESCRIPTION	PROPOSED ACTIONS
1	How C is prominent in IT Field	Guest lecturer
2	Genarations of Computers	Internet
3	Calculator program, Watch program	Lab practices

PROPOSED ACTIONS: TOPICS BEYOND SYLLABUS/ASSIGNMENT/INDUSTRY VISIT/GUEST LECTURER/NPTEL ETC

TOPIC BEYOND SYLLABUS/ADVANCED TOPICS/DESIGN:

1	C Language history
2	Advanced commands and basic commands of MS DOS

WEB SOURCE REFERENCES:

B1	*www.**cprogramming**.com/*
B2	*www.tutorialspoint.com/**cprogramming**/**c**_overview.htm*
B3	*www.**programming**simplified.com/**c***
B4	*www.programiz.com/**c-programming***
B5	*www.c4learn.com/*

DELIVERY/INSTRUCTIONAL METHODOLOGIES:

CHALK & TALK	STUD. ASSIGNMENT	WEB RESOURCES	
LCD/SMART BOARDS	STUD. SEMINARS	ADD-ON COURSES	

ASSESSMENT METHODOLOGIES-DIRECT

ASSIGNMENTS	☐ STUD. SEMINARS	TESTS/MODEL EXAMS	UNIV. EXAMINATION
STUD. LAB PRACTICES	STUD. VIVA	☐ MINI/MAJOR PROJECTS	☐ CERTIFICATIONS
☐ ADD-ON COURSES			☐ OTHERS

ASSESSMENT METHODOLOGIES-INDIRECT

☐ ASSESSMENT OF COURSE OUTCOMES (BY FEEDBACK, ONCE)	STUDENT FEEDBACK ON FACULTY (TWICE)
ASSESSMENT OF MINI/MAJOR PROJECTS BY EXT. EXPERTS	☐ OTHERS

Signature of Faculty

MODEL
LESSON PLAN

HOLY MARY INSTITUTE OF TECHNOLOGY & SCIENCE

(COLLEGE OF ENGINEERING)

Bogaram (V), Keesara (M), R.R. Dist – 501 301

DEPARTMENT OF COMPUTER SCIENCE & ENGINEERING

LESSON PLAN

SUBJECT: PROGRAMMING FOR PROBLEM SOLVING **A.Y: 2018-2019**

YEAR: ECE , MECH & CIVIL I B.Tech I sem

FACULTY: V.SUDHEER GOUD, B.V.RAMANA

S. No	Topic	No. of classes	Total no. of classes for unit
	UNIT-I		
1	Introduction to components of a computer system: disks, primary and secondary memory, processor	1	
2	operating system, compilers, creating, compiling and executing a program etc.,	1	
3	Number systems	1	
4	Introduction to Algorithms: steps to solve logical and numerical problems. Representation of Algorithm,	2	
5	Flowchart/Pseudo code with examples, Program design and structured programming	1	**15**
6	Introduction to C Programming Language: variables (with data types and space requirements),	2	
7	Syntax and Logical Errors in compilation, object and executable code , Operators, expressions and precedence, Expression evaluation	1	
8	Storage classes (auto, extern, static and register), type conversion	1	
9	The main method and command line arguments	1	
10	Bitwise operations: Bitwise AND, OR, XOR and NOT operators	2	

11	Conditional Branching and Loops: Writing and evaluation of conditionals and consequent branching with if, if-else, switch-case, ternary operator, goto, Iteration with for, while, dowhile loops	2	
12	I/O: Simple input and output with scanf and printf, formatted I/O, Introduction to stdin, stdout and stderr	2	
13	Command line arguments	1	
	UNIT-II		**12**
14	Arrays: one and two dimensional arrays, creating, accessing and manipulating elements of arrays	2	
15	Strings: Introduction to strings, handling strings as array of characters, basic string functions available in C (strlen, strcat, strcpy, strstr etc.), arrays of strings	3	
16	Structures: Defining structures, initializing structures, unions, Array of structures	3	
17	Pointers: Idea of pointers, Defining pointers, Pointers to Arrays and Structures, Use of Pointers in self-referential structures, usage of self referential structures in linked list (no implementation)	3	
18	Enumeration data type	1	

	UNIT-III		
19	Preprocessor: Commonly used Preprocessor commands like include, define, undef, if, ifdef, ifndef	3	
20	Files: Text and Binary files, Creating and Reading and writing text and binary files	2	

21	Appending data to existing files, Writing and reading structures using binary files,	2	**10**
22	Random access using fseek	2	
23	ftell and rewind functions.	1	
	UNIT-IV		**10**
24	Functions: Designing structured programs, Declaring a function, Signature of a function, Parameters and return type of a function,	2	
25	passing parameters to functions, call by value, Passing arrays to functions, passing pointers to functions	2	
26	idea of call by reference, Some C standard functions and libraries	2	
27	Recursion: Simple programs, such as Finding Factorial, Fibonacci series etc., Limitations of Recursive functions	2	
28	Dynamic memory allocation: Allocating and freeing memory, Allocating memory for arrays of different data types	2	
	UNIT-V		**10**
29	Algorithms for finding roots of a quadratic equations	2	
30	finding minimum and maximum numbers of a given se	1	
31	finding if a number is prime number, etc.	1	
32	Basic searching in an array of elements (linear and binary search techniques)	2	
33	Basic algorithms to sort array of elements (Bubble, Insertion and Selection sort algorithms)	3	
34	Basic concept of order of complexity through the example programs	1	
	Total No. of Classes		60

TEXT BOOKS

- Byron Gottfried, Schaum's Outline of Programming with C, McGraw

- B.A. Forouzan and R.F. Gilberg C Programming and Data Structures, Cengage Learning, (3rd Edition)

REFERENCE BOOKS

- Brian W. Kernighan and Dennis M. Ritchie, The C Programming Language, Prentice Hall of India
- R.G. Dromey, How to solve it by Computer, Pearson (16th Impression)
- Programming in C, Stephen G. Kochan, Fourth Edition, Pearson Education.
- Herbert Schildt, C: The Complete Reference, Mc Graw Hill, 4th Edition

UNIT-1:

Short Answer Type Questions - 2 Marks

- Define Algorithm
- What is Flowchart

What is Pseudo code?

- What are the symbols of Flowchart

Write an Algorithm for perimeter of Triangle

What are the basic steps involved In problem solving

Long Answer Type Questions - 6 Marks

- Differentiate between Algorithm and Flowchart.
- Write an algorithm to find greatest of given three numbers.
- Write an algorithm to check whether given integer value is PRIME or

NOT.

- Draw the flowchart to find roots of Quadratic equation $ax^2 + bx + c = 0$ Note : Practice more related Algorithms and Flowcharts.

UNIT-2

Short Answer Type Question - 2 Marks

- Write the structure of C program
- Define a variable and a constant in C.
- What is an expression in C.

- What are the operators used in C.
- Mention the significance of main( ) function.
- What are formatted and Unformatted Input-output statements.
- Write the syntax of scanf() and printf() statements.
- Write the syntax do loop control structure.
- Write short notes on go to statement?
- Mention difference between While loop and do…While loop. 11.What is Nested Loop?
- Write the syntax of While statement.
- Write the syntax of for… loop statement.
- Write about ‘Switch” Statement.
- Write the syntax of Simple if statement.
- Write the syntax of if … else statement.
- What is Preprocessor statement in C.
- What are different types of errors occurred during the execution of C program.
- What is Variable and Constant in C? What are types of Constants in C.
- What are basic data types in C.
- What is String Constant.

Long Answer Type Questions - 6 Marks

01. Explain the basic structure of C program.

02. Write about data types used in C.

03. What is Constant? Explain various types of constants in C. (or) 04. Explain various types of Operators in C.

05. Explain formatted and un-formatted input and output statements in C 06. Explain various conditional control structures in C.

07. Explain various conditional looping statements in C.

08. Write the differences between Break and Continue

UNIT-3

Short Answer Type Question - 2 Marks

01. What is function? Write its syntax.

02. What is I/O function? List different types of I/O functions 03. What are the advantages of functions?

04. Write differences between Global and Local variables.

05. List categories of functions

06. What is storage class?

07. What is Iteration

08. What is recursion**?**

Long Answer Type Question - 6 Marks

01. What is Function? Explain in detail

02. Explain different types of functions with an example.

03. Explain about I/O functions.

04. Discuss about Global and Local variables.

05. Explain about Call-by-value with an example

06. Explain about Call-by-reference with an example.

07. Discuss about Functions and Procedures

UNIT-4

Short Answer Type Questions - 2 Marks

01. What is array?

02. What are the different types of arrays?

03. How to declare an array

04. Write a C program to print “IPE” using one dimensional rray 05. What is two-dimensional array? Write its application.

06. What is the String handling functions

Long Answer Type Questions - 6 Marks

01. Define an Array. Explain one-dimensional array

02. Explain about two - dimensional array?

03. Explain how to declare, initialize array of char type. 04. Write a C program to sort a list of numbers.

05. Write a C program for addition of two matrices. 06. Write a program for multiplication of two matrices. 07. Write a program to print transpose of a matrix.

08. Explain String handling functions in C.

- Write a C program to concatenate the given two strings and print new string.
- Explain about File operations like fopen( ), fclose( ), fprint( ), fscan( ).

UNIT-5

Short Answer Type Questions - 2 Marks

- What is Structure? Write the syntax of “structure” (struct).
- What is Pointer? Which variables are used to represent it?

- What are the advantages of pointers?

What are the operators used with pointers.

- Write various operations performed by Structure.

5. What is a nested structure?

- What advantage of structures over an Array?

What is Union? Write the syntax of Union.

Long Answer Type Questions - 6 Marks

- What is Structure? Explain in detail.
- Explain the advantages of structure type over the array the variable.
- Explain about structure and arrays.
- What is Union? Explain in detail.

What are differences

Assignment questions- I

- Write a C program to find the maximum of N numbers
- Explain with example where a ‘for’ loop is suitable and where a ‘do-while’ loop is suitable.
- What is recursion? Using recursion find the Fibonacci series.
- What is ternary operator? Explain.
- Give syntax of simple switch case statement.

- Write brief notes on computer languages.
- Write a C program to find factorial of a given number 'N' by using iteration and recursion separately.
- Explain switch statement. Explain its usage with a sample C-program.
- . Write a C program for addition of two matrices
- Draw the flowchart to find roots of Quadratic equation $ax^2 + bx + c = 0$

Assignment questions- II

- What is meant by structure? Discuss with a C-program about operations on structures.
- What are the storage classes in C? Explain their usage with a sample C-program.
- What are the memory allocation functions?
- What is meant by sorting? Give an example.
- Write a C program to read n unsorted numbers to an array of size n and pass the address of this array to a function to sort the numbers in ascending order using selection sort technique.
- Write a C program to add two numbers using call by pointers method.
- What is the use of strcat() function?
- Write short notes on Bubble sorting technique.
- What is Structure? Explain in detail.
- Write a program to print transpose of a matrix.

Objective questions:

- Which of the following statements should be used to obtain a remainder after dividing 3.14 by 2.1 ?

A.rem = 3.14 % 2.1;
B.rem = modf(3.14, 2.1);
C.rem = fmod(3.14, 2.1);
D.Remainder cannot be obtain in floating point division.

Answer: Option C

Explanation:

fmod(x,y) - Calculates x modulo y, the remainder of x/y.
This function is the same as the modulus operator. But *fmod()* performs floating point divisions.

- What are the types of linkages?

A.Internal and External
B.External, Internal and None
C.External and None
D.Internal

Answer: Option B

Explanation:

External Linkage-> means global, non-static variables and functions.
Internal Linkage-> means static variables and functions with file scope.
None Linkage-> means Local variables.

- Which of the following special symbol allowed in a variable name?

A.* (asterisk)
B.| (pipeline)

C.- (hyphen)
D._ (underscore)

Answer: Option D

Explanation:

Variable names in C are made up of letters (upper and lower case) and digits. The underscore character ("_") is also permitted. Names must not begin with a digit.

- Is there any difference between following declarations?

1 : extern int fun();
2 : int fun();
A.Both are identical
B.No difference, except *extern int fun();* is probably in another file
C.*int fun();* is overrided with *extern int fun();*
D.None of these

Answer: Option B

Explanation:

extern int fun(); declaration in C is to indicate the existence of a global function and it is defined externally to the current module or in another file.

int fun(); declaration in C is to indicate the existence of a function inside the current module or in the same file.

- would you round off a value from 1.66 to 2.0?

A.ceil(1.66)
B.floor(1.66)
C.roundup(1.66)
D.roundto(1.66)

nswer: Option A

Explanation:

```
/* Example for ceil() and floor() functions: */

#include<stdio.h>
#include<math.h>

int main()
{
    printf("\n Result : %f" , ceil(1.44) );
    printf("\n Result : %f" , ceil(1.66) );

    printf("\n Result : %f" , floor(1.44) );
    printf("\n Result : %f" , floor(1.66) );

    return 0;
}
// Output:
// Result : 2.000000
```

```
// Result : 2.000000
// Result : 1.000000
```

6.By default a real number is treated as a

A.float
B.double
C.long double
D.far double

Answer: Option B

Explanation:

In computing, 'real number' often refers to non-complex floating-point numbers. It include both rational numbers, such as 42 and 3/4, and irrational numbers such as pi = 3.14159265...

When the accuracy of the floating point number is insufficient, we can use the *double* to define the number. The *double* is same as *float* but with longer precision and takes double space (8 bytes) than *float*.

To extend the precision further we can use *long double* which occupies 10 bytes of memory space.

- Which of the following is not user defined data type?

```
1 : struct book
    {
        char name[10];
        float price;
        int pages;
    };
2 : long int l = 2.35;
3 : enum day {Sun, Mon, Tue, Wed};
```

A.1
B.2
C.3
D.Both 1 and 2

Answer: Option B

Explanation:

C data types classification are

- Primary data types
    - int
    - char
    - float
    - double
    - void
- Secondary data types (or) User-defined data type
    - Array

- Pointer
- Structure
- Union
- Enum

So, clearly *long int l = 2.35;* is not User-defined data type.
(i.e.*long int l = 2.35;* is the answer.